ADO

PVC PROFILE TECHNICAL CATALOGUE

ADO

INDEX

Ado Quality Certificate — 5
Ado Profile Systems 3D — 6
Ado Profile Systems Technic Detail — 8
Penwood 883 MD & AD Serie — 10
Penwood 750 Serie — 14
Penwood 760 Serie — 20
Penwood 632 Serie — 26
Penwood 232 Sliding Serie — 32
W 800- W 860 Serie — 38
W 873 MD Serie — 42
W 790 Serie — 48
W 777 MD & AD Serie — 54
W 752 - W 750 Serie — 60
W 760 Serie — 68
W 640 - W 642 Serie — 74
W 634 Serie — 80
W 632 Serie — 86
W 624 Serie — 92
WO 60 Serie — 98
FR 60 & FR 70 Serie — 104
W 330 - W 332 Serie — 118
W 880 Hebeschiebe Serie — 124
W 232 Sliding System with Single Rail — 134
W 232 Sliding System — 134
W 222 Sliding System — 142
W 150 Sliding System — 150
Roller Shutter Profile System — 154
Shutter System — 166
Glazing Bead Combination Table — 168
Auxiliary Profile — 171

ADO QUALITY CERTIFICATED

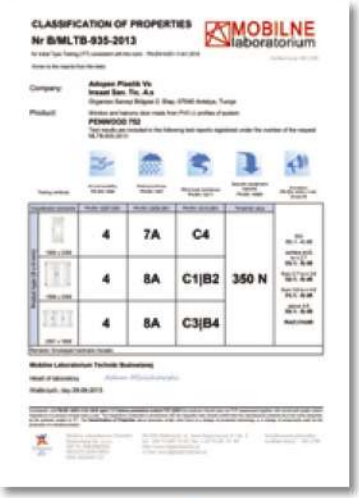

Penwood CE

EN 12412-2 Uf:1.1W/(m².K)

ROSENHEIM - GERMANY

EMI - HUNGARY

INCERC - ROMANIA

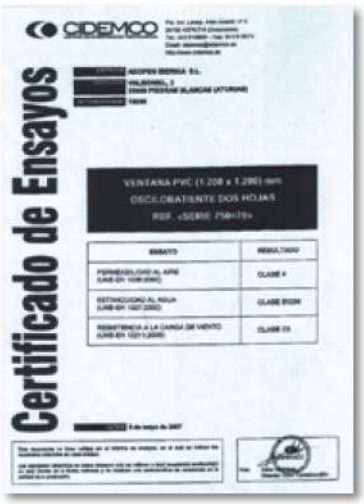

CIDEMCO - SPAIN

IsO 14001:2015

IsO 9001:2015

ADO PROFILE SYSTEMS

Penwood 883 MD & AD

Penwood 750

Penwood 760

Penwood 632

Penwood 232 Sliding

W 800 / W 860

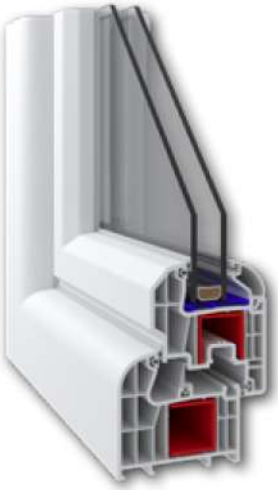

W 873 MD & AD

W 790

W 777 MD & AD

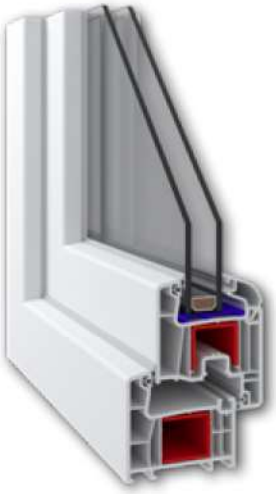

W 752 / W 750

W 760

W 642 / W 640

W 634

W 632 - W 630

W 624

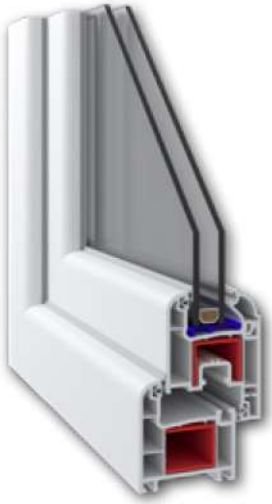

WO 60

FR 60 & FR 70

W 330 / W 332

W 880
(HEBESCHIEBE)

W 232 SLIDING SYSTEM
WITH SINGLE RAIL

W 232 SLIDING
SYSTEM

W 222 SLIDING
SYSTEM

W 150 SLIDING
SYSTEM

W ROLLER SHUTTER

SHUTTER

MAHOGANY
ST 504

P. DARK OAK
ST 541

P. GOLDEN OAK
ST 540

NATURAL OAK
HR 570

SILVER TEAK
SB 513

WHITE
ST 517

LAKE BLUE
ST 522
for Penwood

MOSS GREEN
ST 521
for Penwood

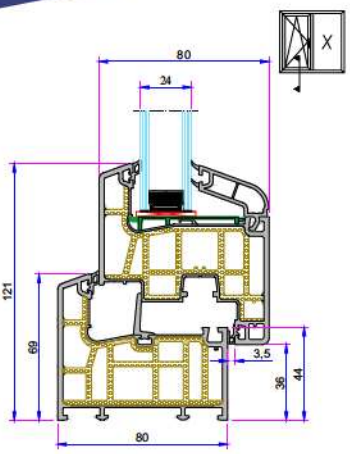

PENWOOD 883 MD & AD SERIES

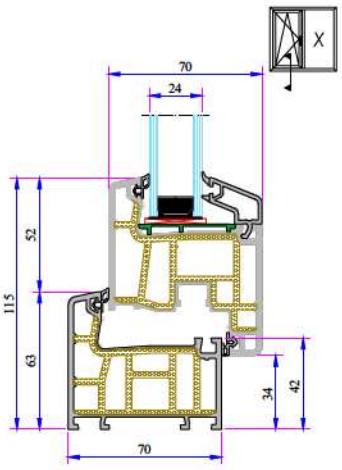

PENWOOD 750 SERIES

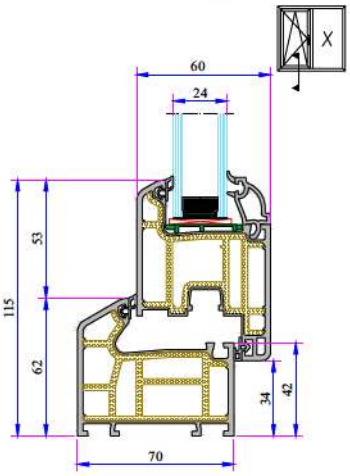

PENWOOD 760 SERIES

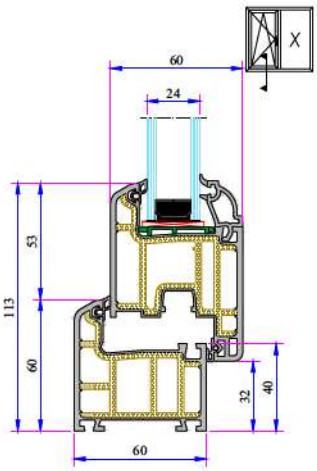

PENWOOD 632 SERIES

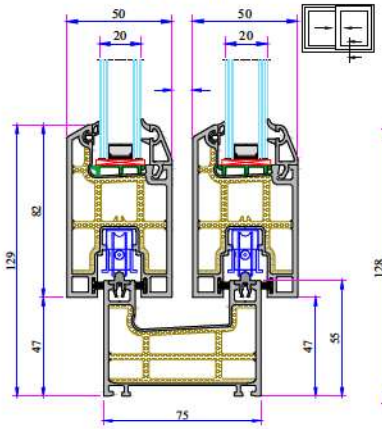

PENWOOD 232 SLIDING SERIES

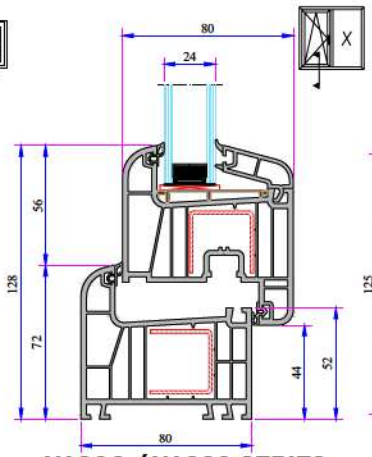

W 800 / W 860 SERIES

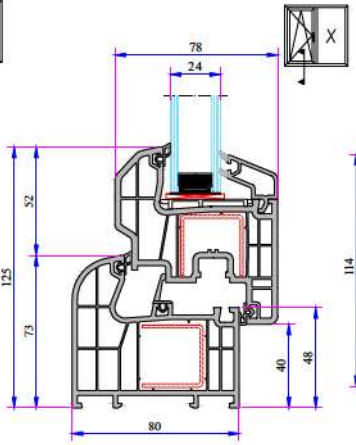

W 873 MD SERIES

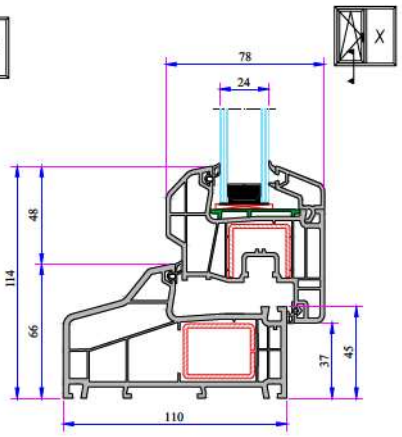

W 790 SERIES

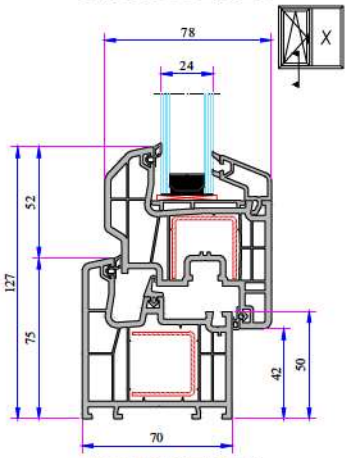

W 632 SERIES

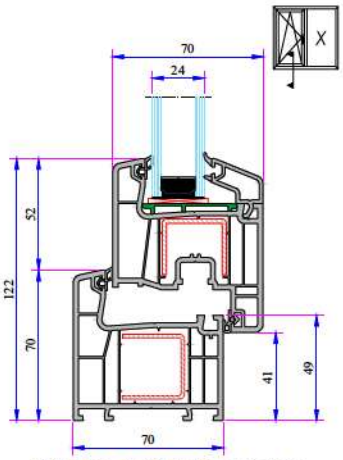

W 752 / W 750 SERIES

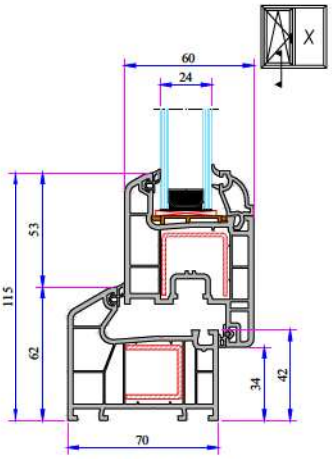

W 760 SERIES

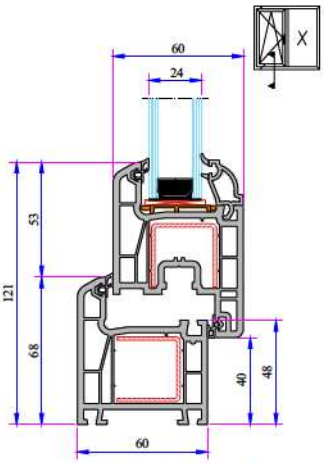

W 640 / W 642 SERIES

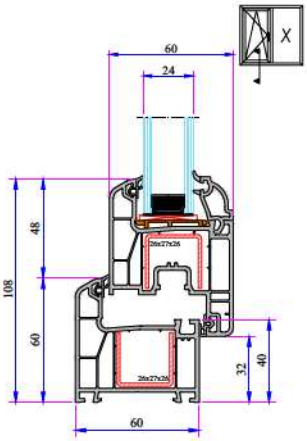

W 634 SERIES

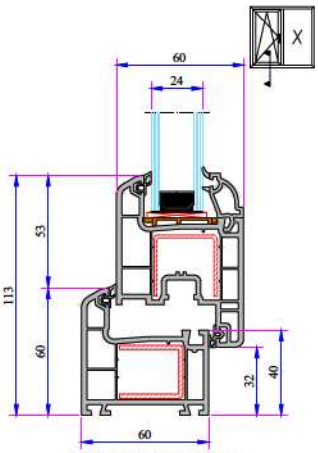

W 632 SERIES

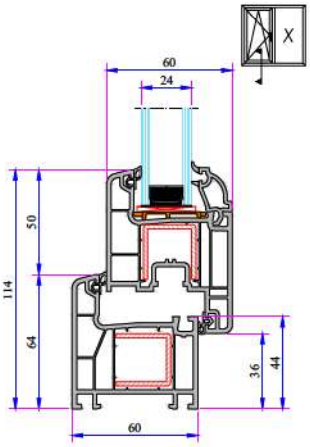

W 624 SERIES

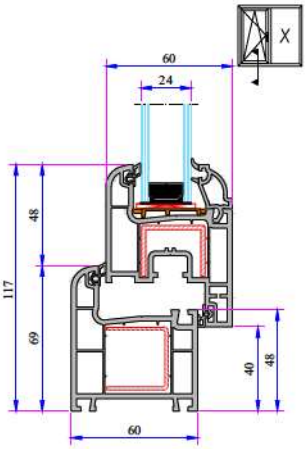

WO 60 (101) SERIES

ADO PROFILE SYSTEMS

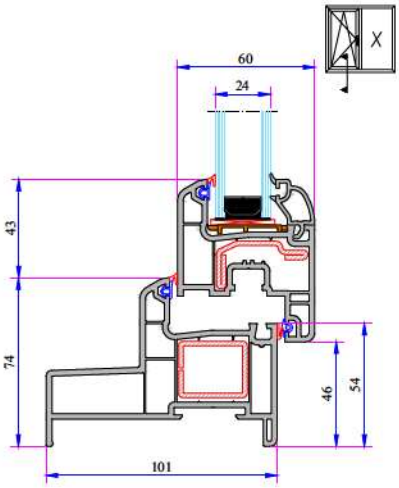

W FR 60 SERIES

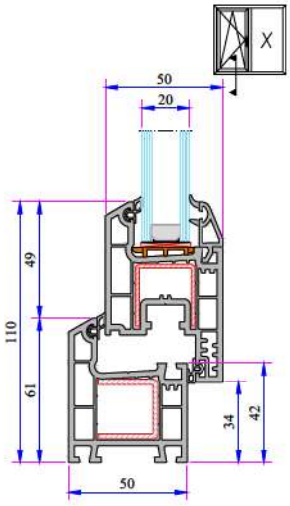

W 330 / W 332 SERIES

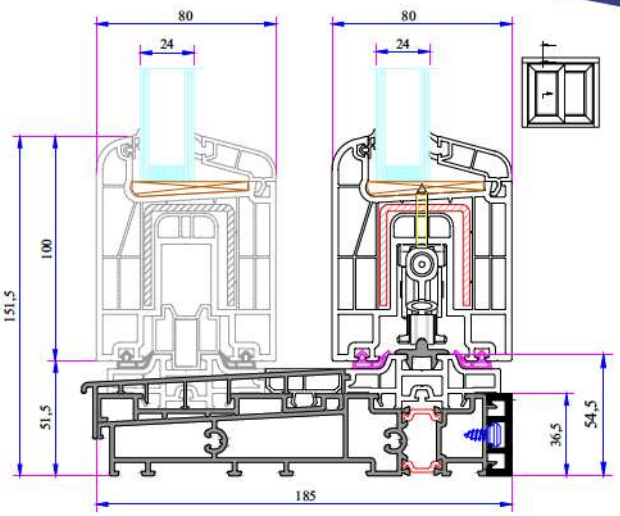

W 880 (HEBESCHIEBE) SERIES

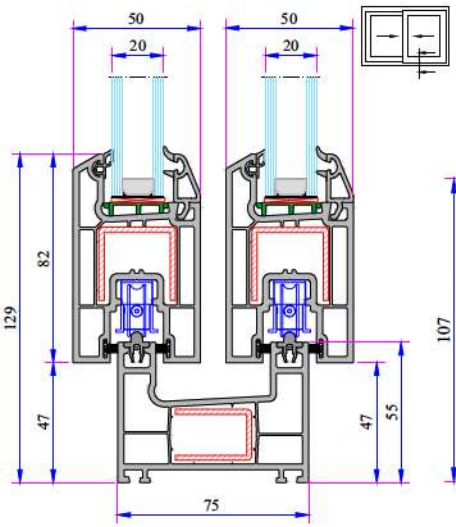

W 232 SLIDING SYSTEM WITH SINGLE RAIL SERIES

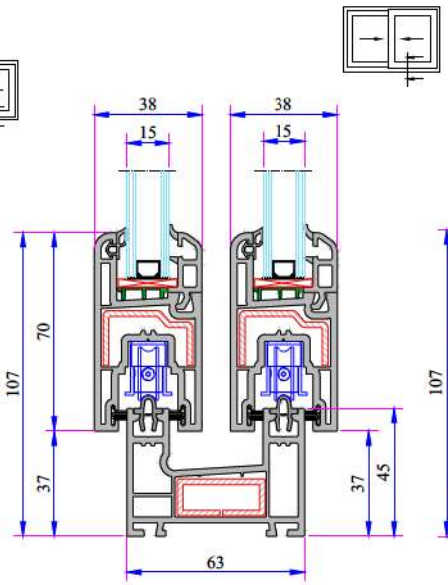

W 232 SLIDING SYSTEM WITH DOUBLE RAIL SERIES

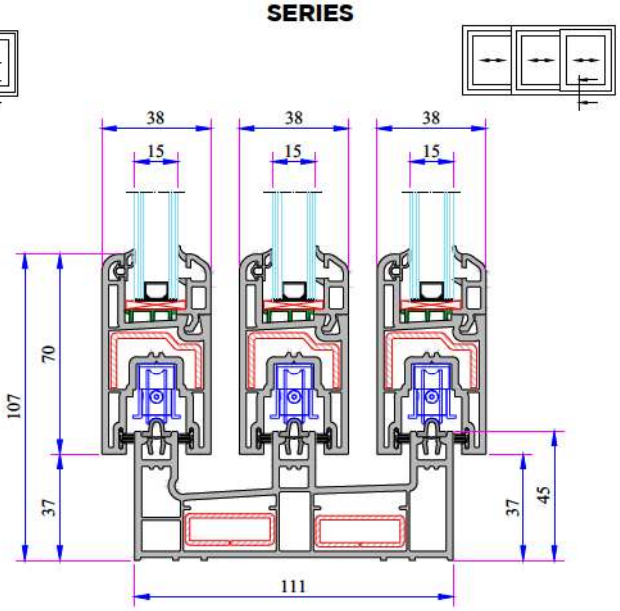

W 222 SLIDING SYSTEM SERIES

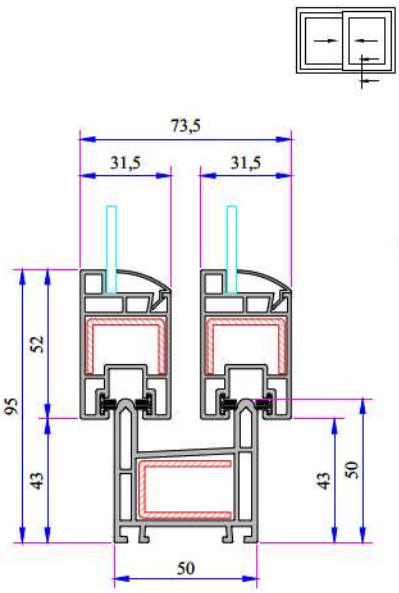

W 150 SLIDING SYSTEM SERIES

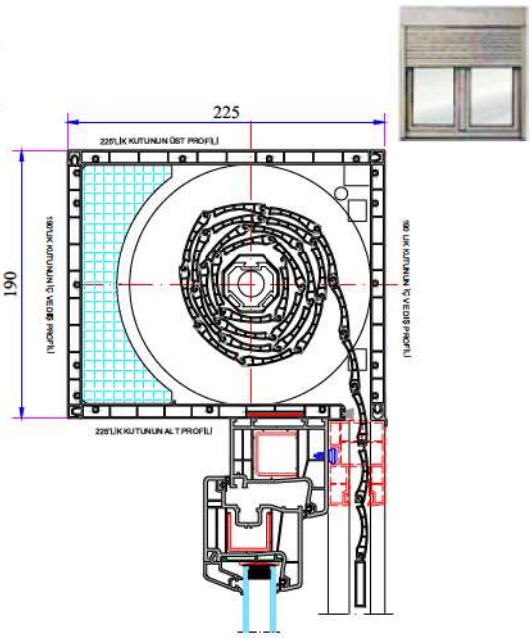

W ROLLER SHUTTER SERIES

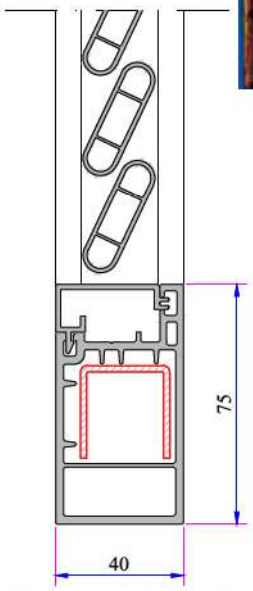

SHUTTER SERIES

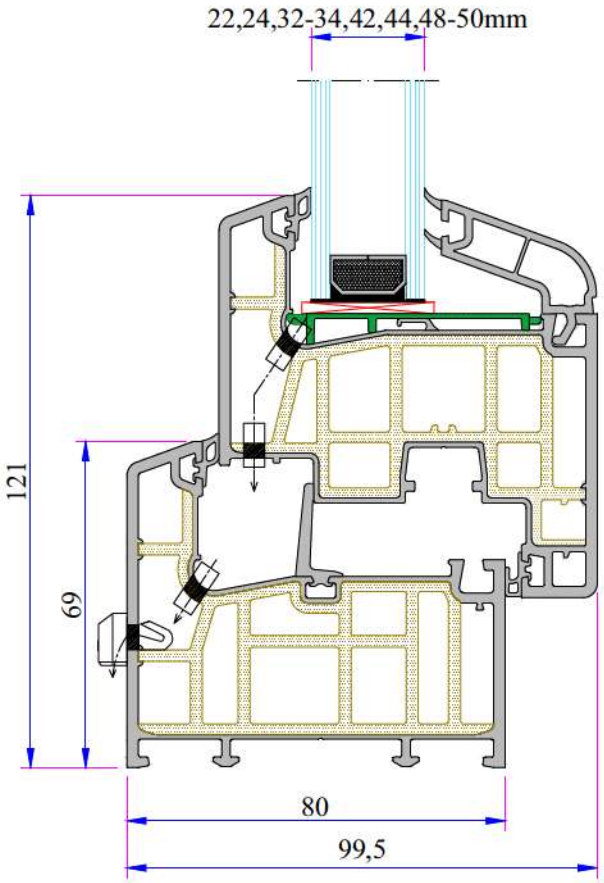

TECHNICAL

PENWOOD 883 MD & AD SERIES

Profile Width: 80 mm

Number of chambers: 6 chambers system

Profile Class: A - B Class (TS EN 12608-1)

Seal Type: Triple seal system (External / Internal / Middle)

Seal Type and Color: TPE – Grey /Black

Glass Thickness (mm): 22, 24, 32-34, 42, 44, 48-50 mm

The thermal insulation Uf: 0,90W/m²K

Uw: 0,77 W/m²K

INSTRUCTION

· 80 mm profile system. Because of the composite profile extruded together, No need for extra metal reinforcement inside.

· No need for reinforcement cutting screwing unit and workman.

· Compared with metal reinforcement system profile, it has %30 more advantages with max heat-sound and water insulation.

· Just cut and weld. You do not need Metal Reinforcement and extra stock area for Metal Reinforcement.

· Possibility to install single 4-6 mm or double glazing 22, 24, 32 - 34, 42, 44, 48 - 50 mm with different thickness of glazing bead.

· It has water drainage channel, it can be directly drilled after cutting.

· Color range for laminated products.

· It's quality is accredited by national and international certificates.

PENWOOD 883 MD & AD SERIES
PVC PROFILE SYSTEM

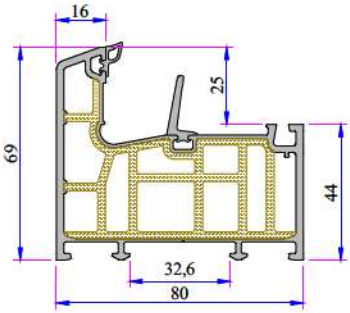

Frame Profile
883.1000.2.BC
(without mid. seal)
883.1000.2.SC
(with mid. seal)

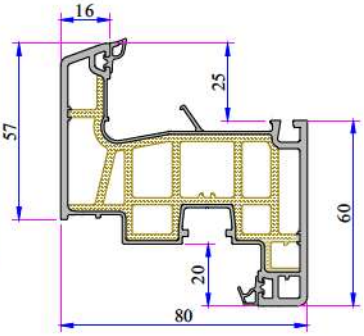

Sash Profile
883.2000.2

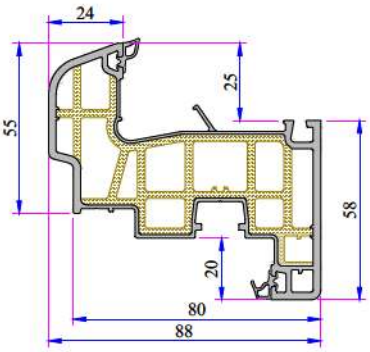

Offset Type Sash Profile
883.2200.2

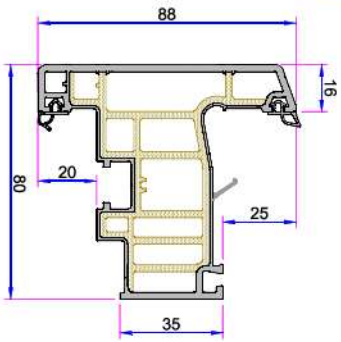

Outward Opening Sash Profile
883.2001.2

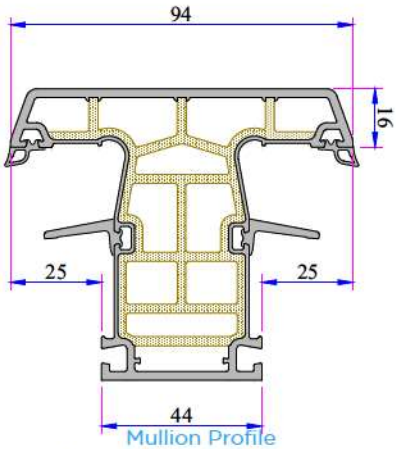

Mullion Profile
883.3000.2.BC (without mid. seal)
883.3000.2.SC (with mid. seal)

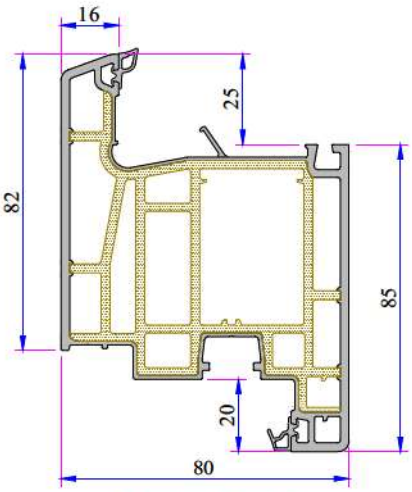

Door Sash Profile
883.2100.2

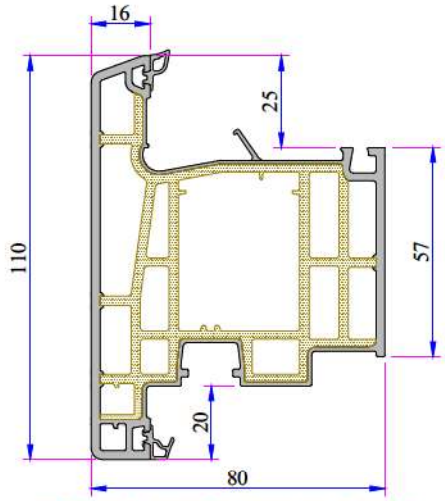

Outward Opening Door Sash Profile
883.2101.2

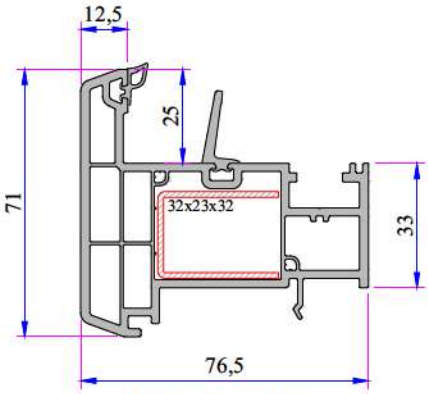

Lap Joint Profile
883.3100 .BC (without mid. seal)
883.3100 .SC (with mid. seal)

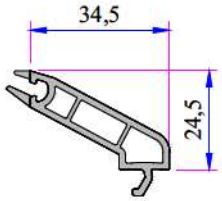

Glazing Bead 22mm
433.4000

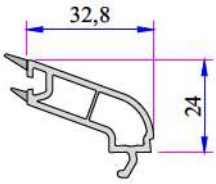

Glazing Bead 24mm
883.4204

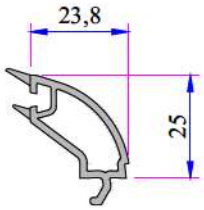

Glazing Bead 32-34mm
777.4204

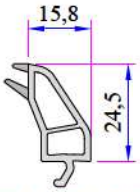

Glazing Bead 42mm
433.4200

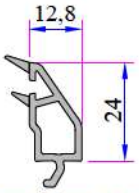

Glazing Bead 44mm
883.4800

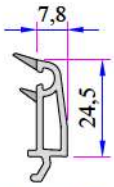

Glazing Bead 48-50mm
433.4500

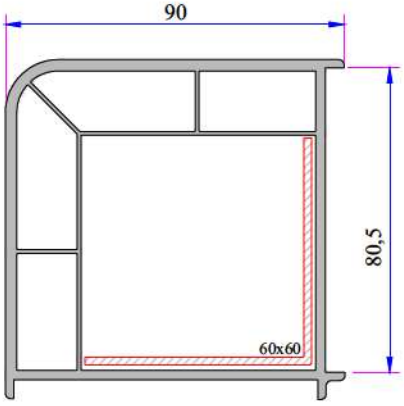

90° Corner Profile
080.5100

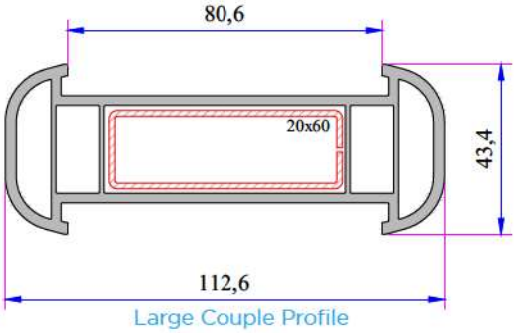

Large Couple Profile
080.5000

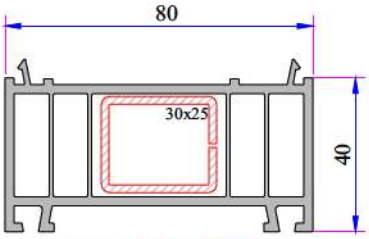

Frame Lifting Profile
080.5300

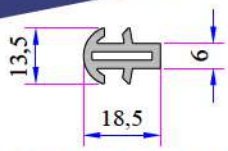

Short Couple Profile
099.5003

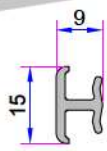

Universal Short Coupling Profile
099.5004

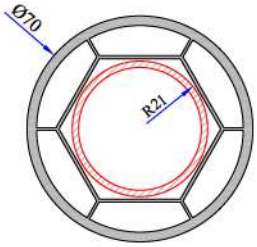

Pipe Profile
070.5106

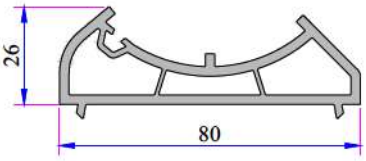

Angled Pipe Adaptor Profile
080.5104

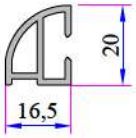

Offset Profile
900.6307

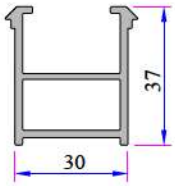

Frame Montage Profile
060.5301

883 Penwood Re-Inforcement Profiles

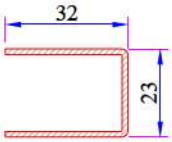

Lap Joint Profile
Reinforcement
34027-12045

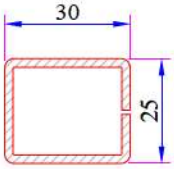

Frame Lifting Profile
Reinforcement
34022-12119

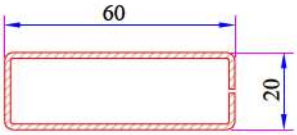

Large Coupling Profile
Reinforcement
34022-12106

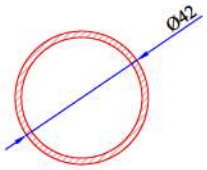

Pipe Profile Reinforcement
34022-12502

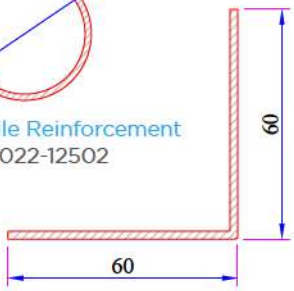

90° Corner Profile
Reinforcement
34022-12306

883 Penwood Installation

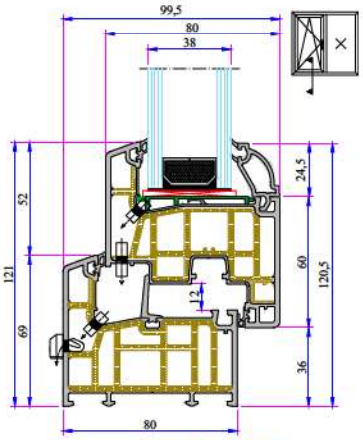

Frame - Sash Installation

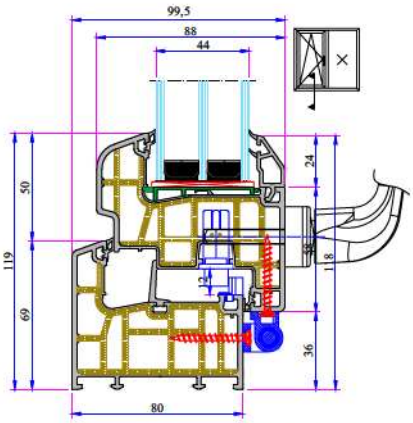

Frame - Offset Type Sash Installation

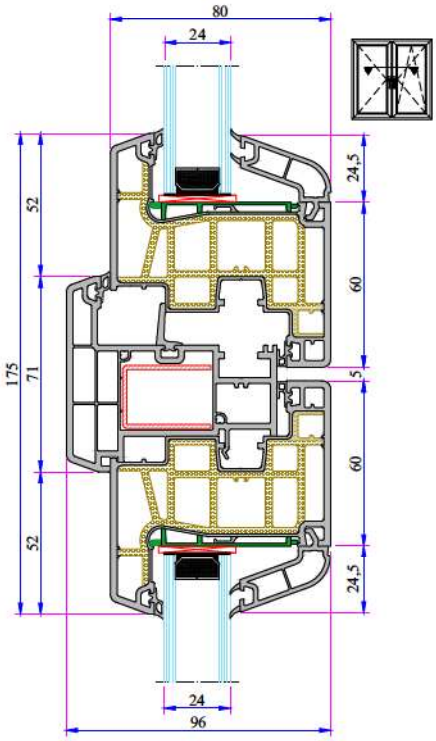

Sash - Lap Joint - Sash Installation

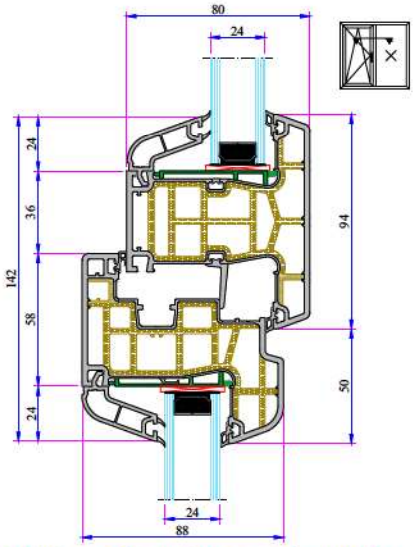

Mullion - Offset Type Sash Installation

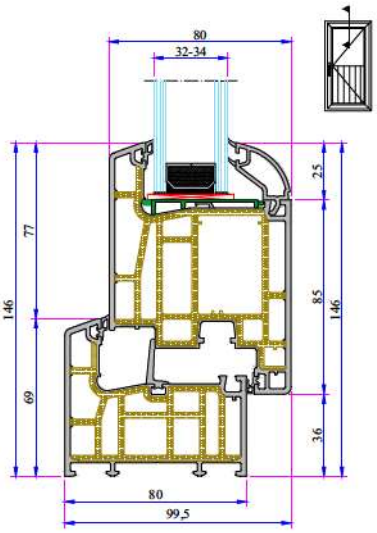

Frame - Door Sash Installation

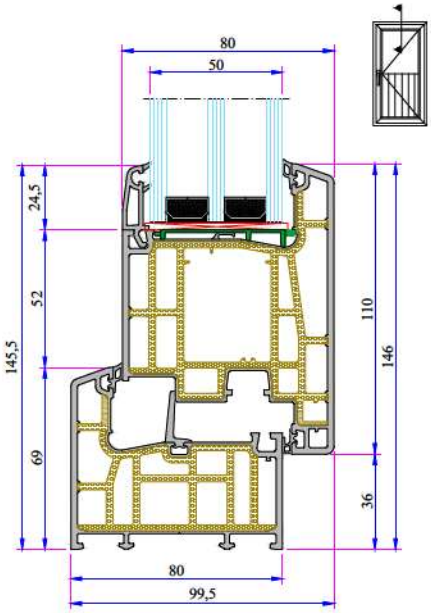

Frame - Outward Opening Door Sash Installation

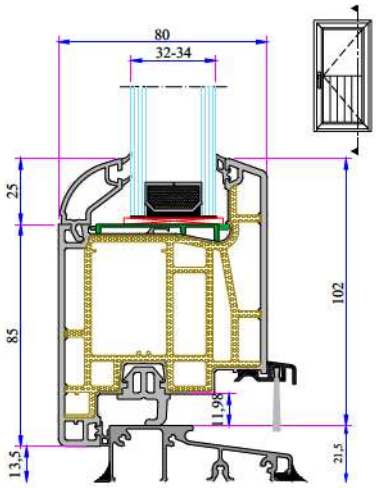

Aluminium Threshold Profile Installation

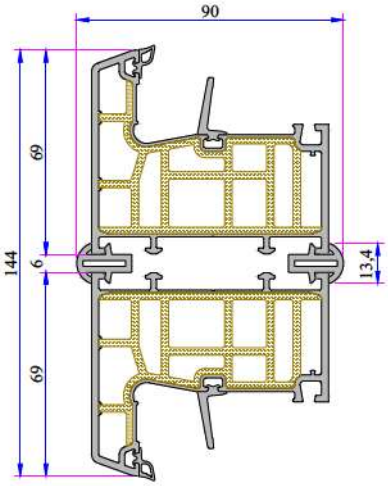

Short Coupling Profile Installation

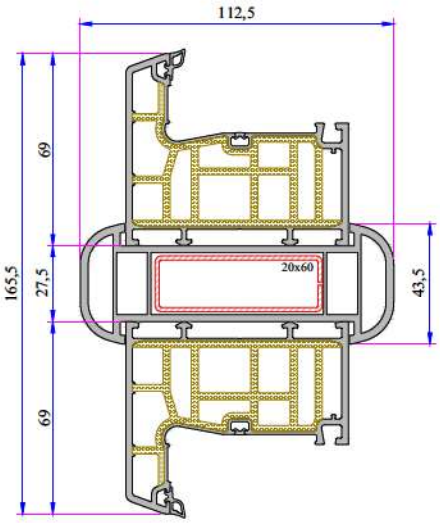

Large Coupling Profile Installation

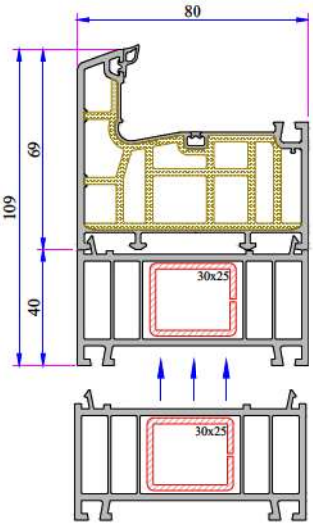

Frame Lifting Profile Installation

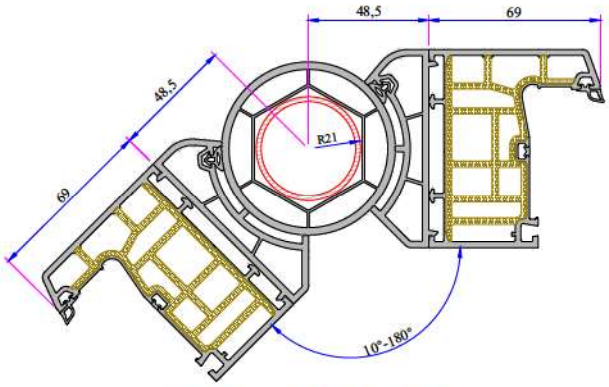

135° Corner Profile Installation

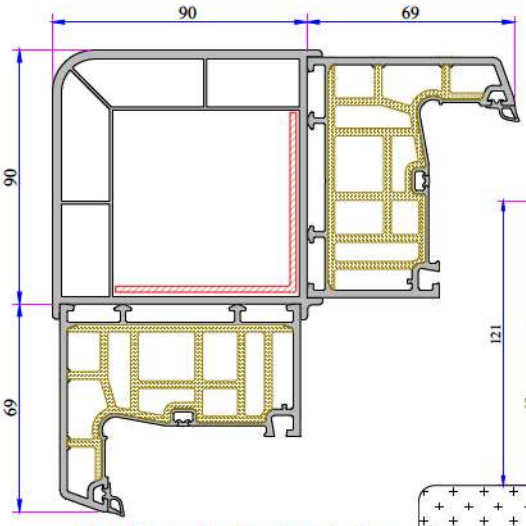

90° Corner Profile Installation

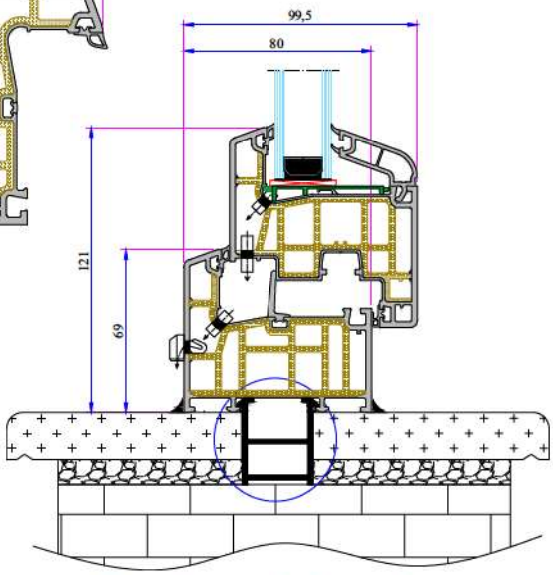

Frame Montage Profile Installation

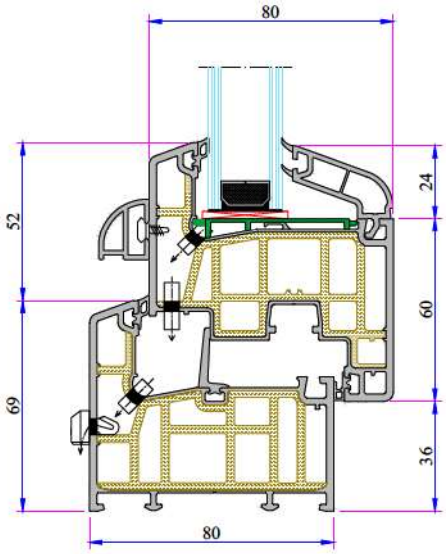

Offset Type Profile Profile Installation

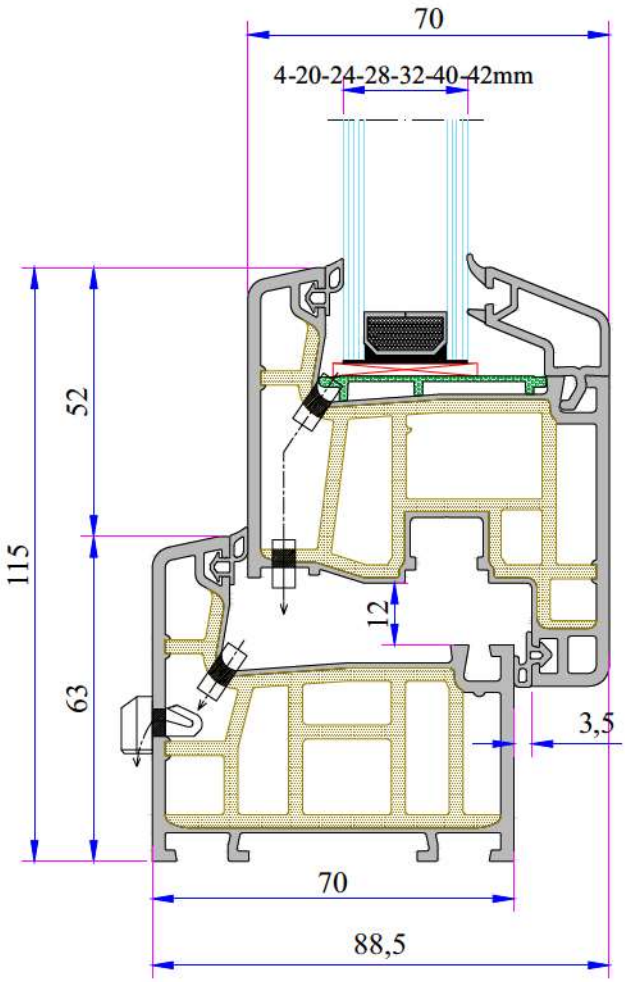

TECHNICAL

Penwood 750 SERIES
Profile Width: 70 mm
Number of chambers: 5 chambers system
Profile Class: B Class (TS EN 12608-1)
Seal Type: External / Internal double seal system
Seal Type and Color: TPE – Grey /Black
Glass Thickness (mm): 4, 20, 24, 28, 32, 40, 42 mm
The thermal insulation Uf: 1,1W/m²K
Uw: 0,89 W/m²K

INSTRUCTION

· 70 mm profile system. Because of the composite profile extruded together, No need for extra metal reinforcement inside.

· No need for reinforcement cutting screwing unit and workman.

· Compared with metal reinforcement system profile, it has %30 more advantages with max heat-sound and water insulation.

· Just cut and weld. You do not need Metal Reinforcement and extra stock area for Metal Reinforcement.

· Possibility to install single 4-6 mm or double glazing 20, 24, 28, 32, 40, 42 mm with different thickness of glazing bead.

· It has water drainage channel, it can be directly drilled after cutting.

· Color range for laminated products.

· It's quality is accredited by national and international certificates.

PENWOOD 750 SERIES
PVC PROFILE SYSTEM

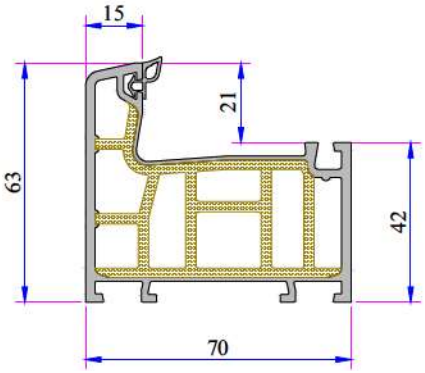

Frame Profile
750.1000.2

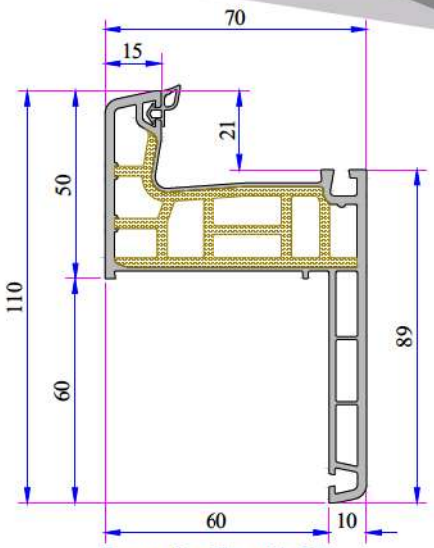

Frame Profile with Sill
750.1200.2
750.1200.2.PC (with Double Seal)

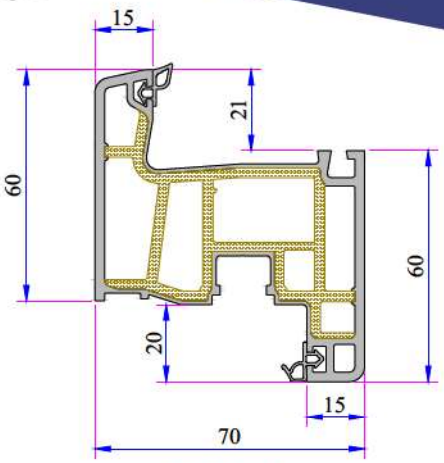

Sash Profile
750.2000.2

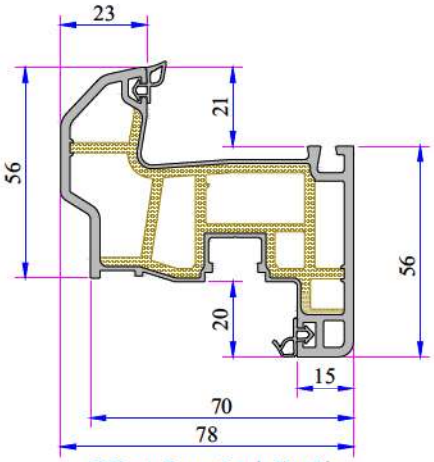

Offset Type Sash Profile
750.2200.2

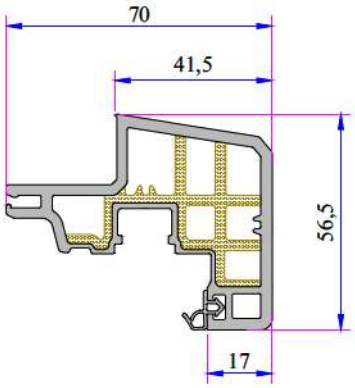

Glazing Sash Profile
750.2015.2

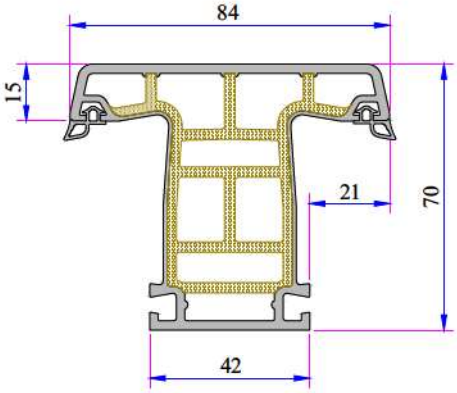

Mullion Profile
750.3000.2

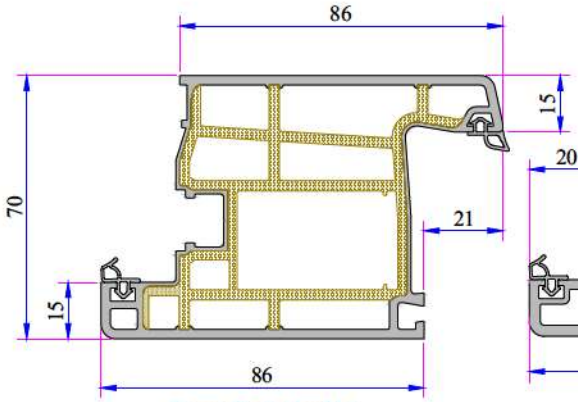

Door Sash Profile
750.2100.2

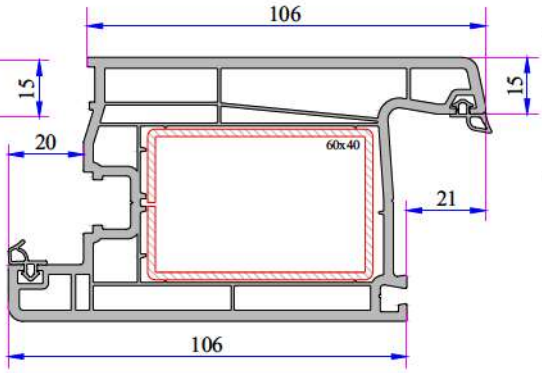

Super Door Sash Profile
750.2103

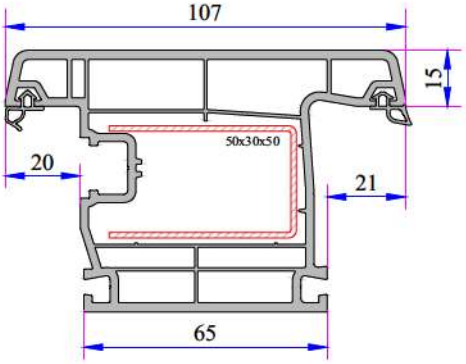

Outward Opening Door Sash Profile
750.2101

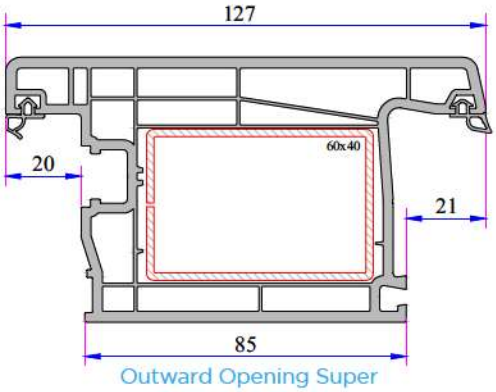

Outward Opening Super
Door Sash Profile
752.2104

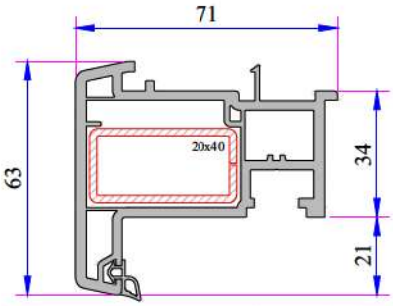

Static Lap Joint Profile (Spiked)
750.3101

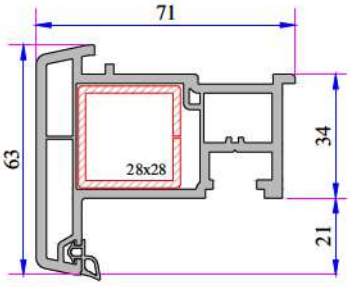

Lap Joint Profile
750.3100

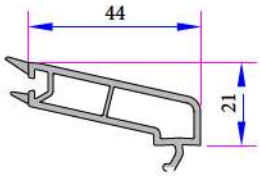

Single Glazing
Bead 4-6 mm
750.4000

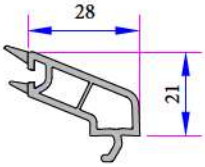

Double Glazing
Bead 20 mm
750.4100

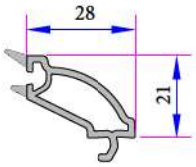

Dec. Double Glazing
Bead 20 mm
750.4102

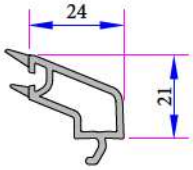

Double Glazing
Bead 24 mm
750.4200

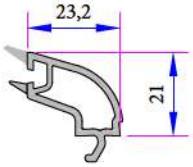

Dec. Glazing
Bead 24 mm
750.4204

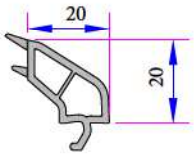

Double Glazing
Bead 28 mm
101.4100

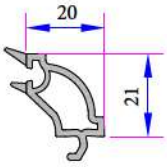

Dec. Double Glazing
Bead 28 mm
101.4102

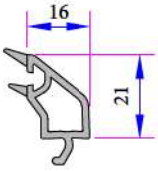

Triple Glazing
Bead 32 mm
750.4500

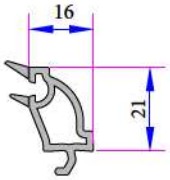

Dec. Triple Glazing
Bead 32 mm
101.4202

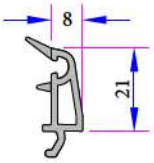

Triple Glazing
Bead 40 mm
101.4500

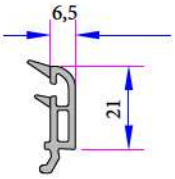

Triple Glazing
Bead 42 mm
532.4500

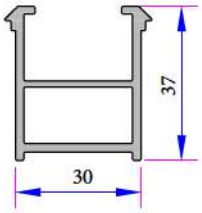

Frame Montage Profile
060.5301

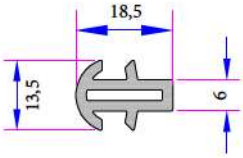

Coupling Profile
099.5003

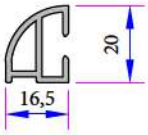

Offset Profile
900.6307

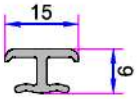

Universal Short
Coupling Profile
099.5004

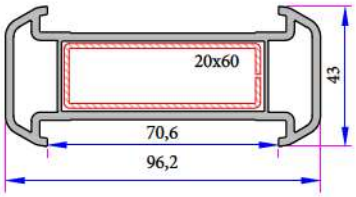

Large Coupling Profile
070.5000

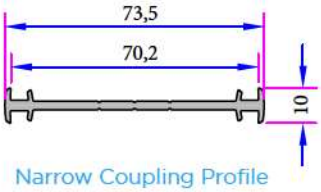

Narrow Coupling Profile
070.5001

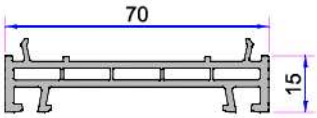

Frame Lifting Profile 15 mm
070.5304

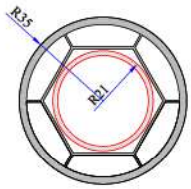

Pipe Profile
070.5106

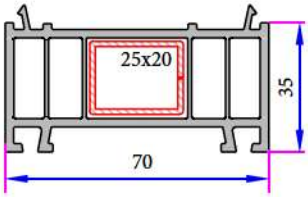

Frame Lifting Profile 35 mm
070.5300

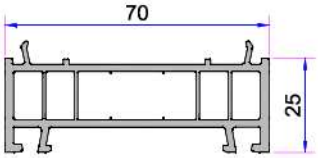

Frame Lifting Profile 25 mm
070.5306

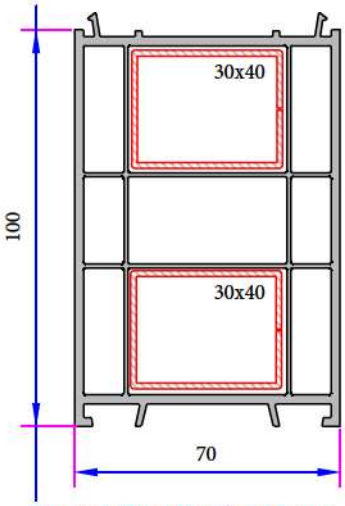

Frame Lifting Profile 100 mm
070.5302

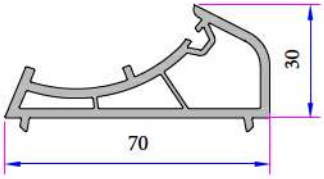

Angle Pipe Adaptor Profile
070.5104

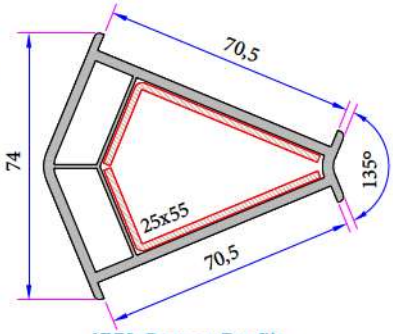

135° Corner Profile
070.5102

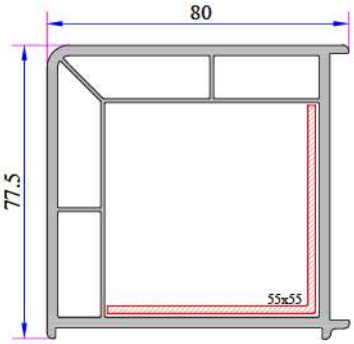

90° Corner Profile
070.5100

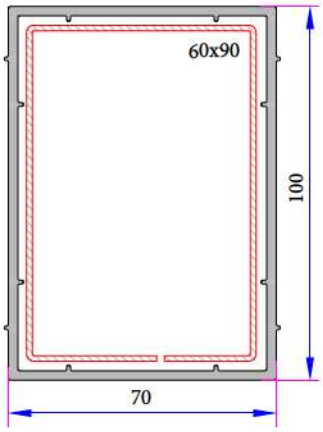

70x100 mm Box Profile
070.5202

750 Penwood Re-Inforcement Profiles

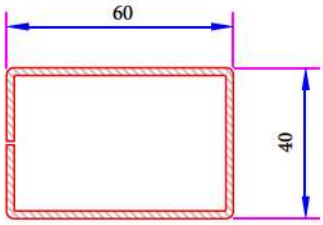

Outward Opening Super Door Sash Profile Reinforcement
34022 - 12110

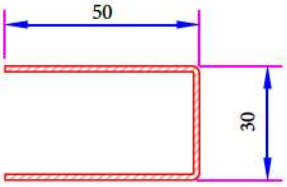

Outward Opening Door Sash Profile Reinforcement
34022 - 12013

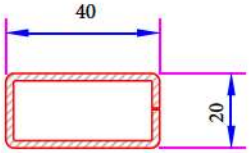

Lap Joint Frame Lifting Profile Reinforcement
34022 - 12114

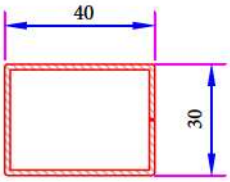

100mm Frame Lifting Reinforcement
34022-12120

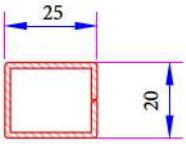

35mm Frame Lifting Reinforcement
34022 - 12104

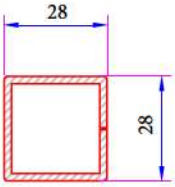

Lap Joint Prpfile Reinforcement
34022 - 12113

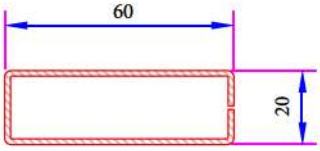

Large Coupling Profile Reinforcement
34022 - 12106

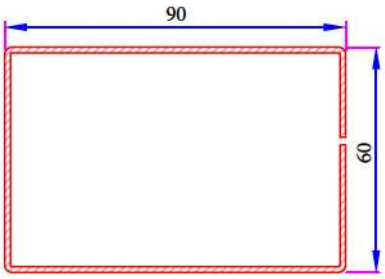

70x100 Box Profile Reinforcement
34022-12121

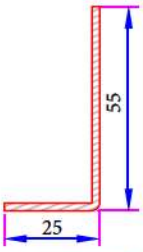

135° Corner Profile Reinforcement
34022 - 12303

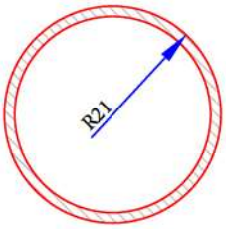

Pipe Profile Reinforcement
34022 - 12502

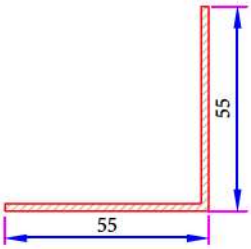

90° Corner Profile Reinforcement
34022 - 12305

750 Penwood Installation

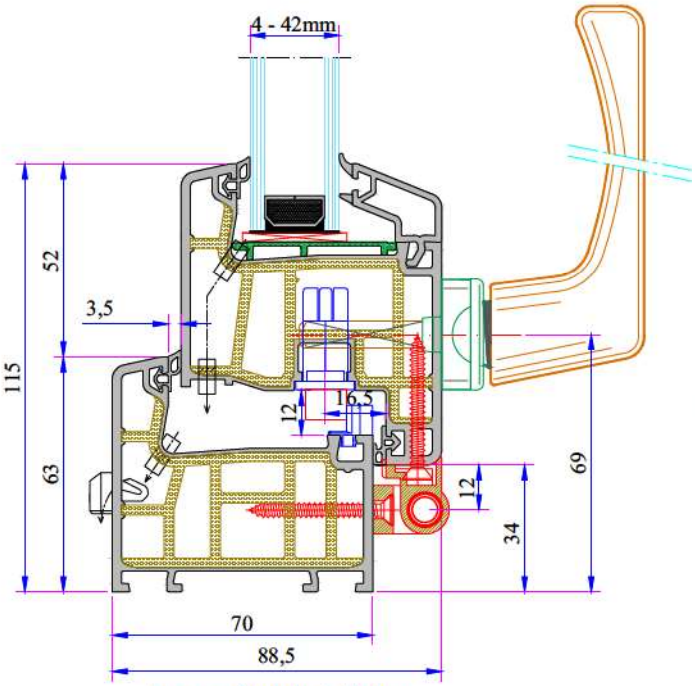

Frame - Sash Installation

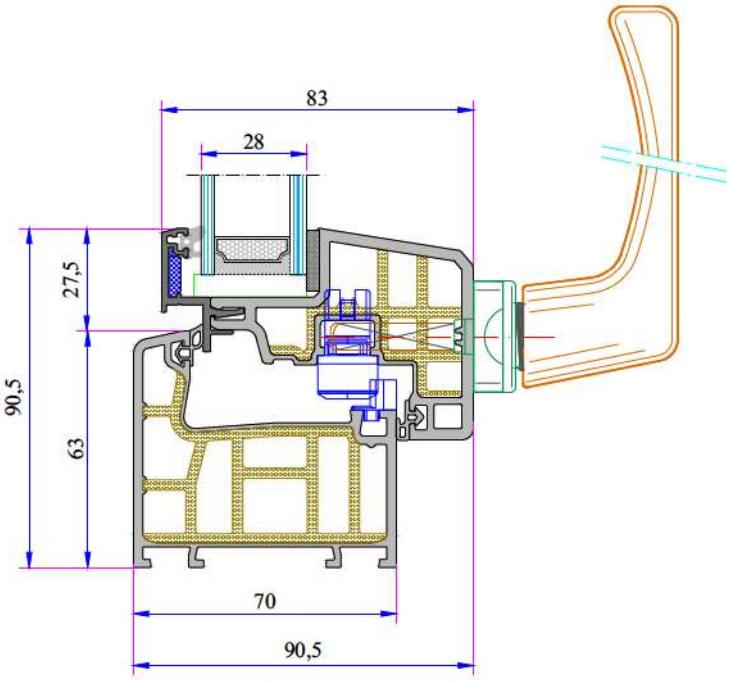

Frame - Glazing Sash Installation

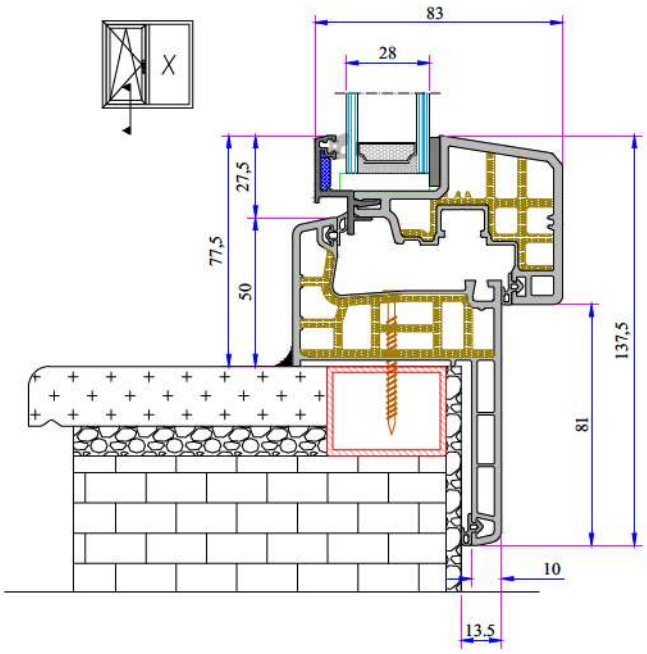

Frame With Sill - Glazing Sash Installation

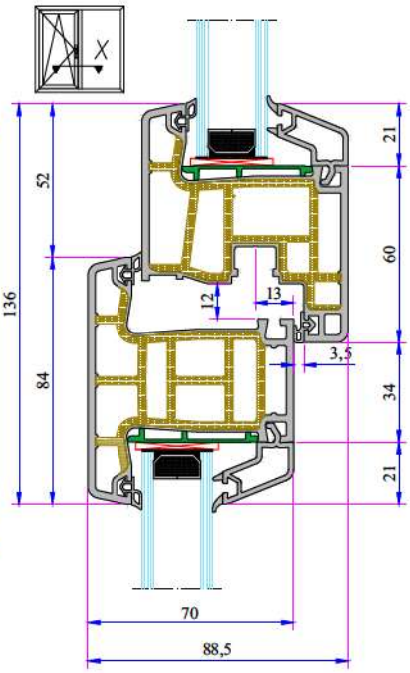

Mullion - Sash Installation

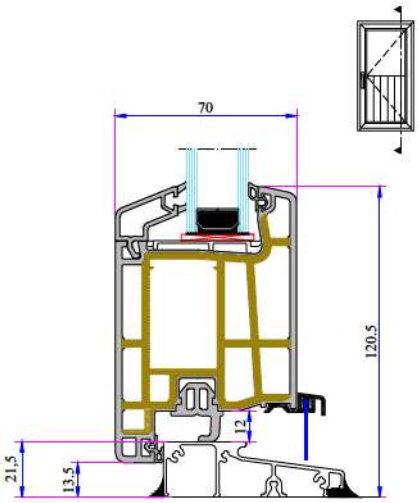

With Aluminium Threshold Frame Door Sash Installation

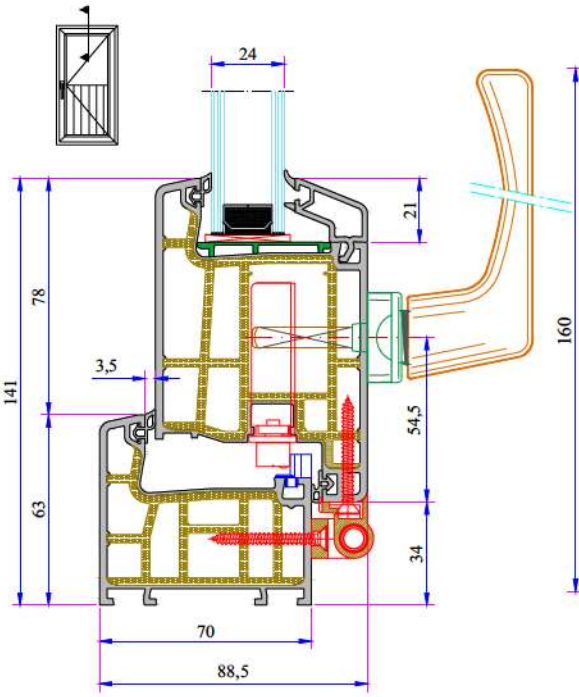

Frame - Door Sash Installation

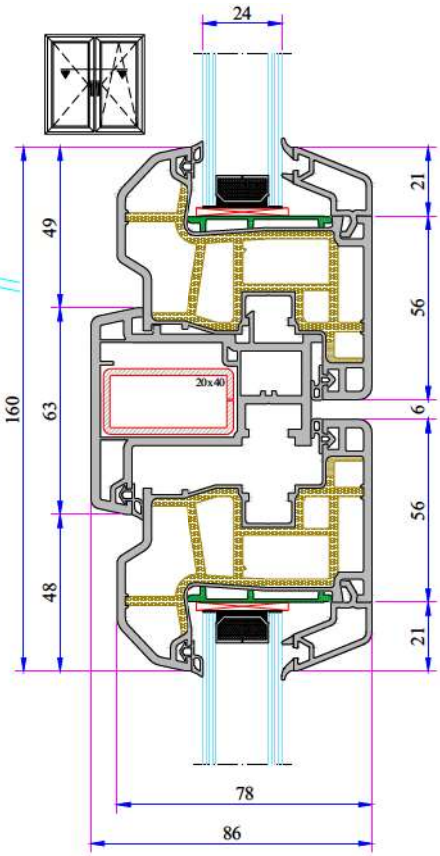

Offset Sash - Lap Joint Installation

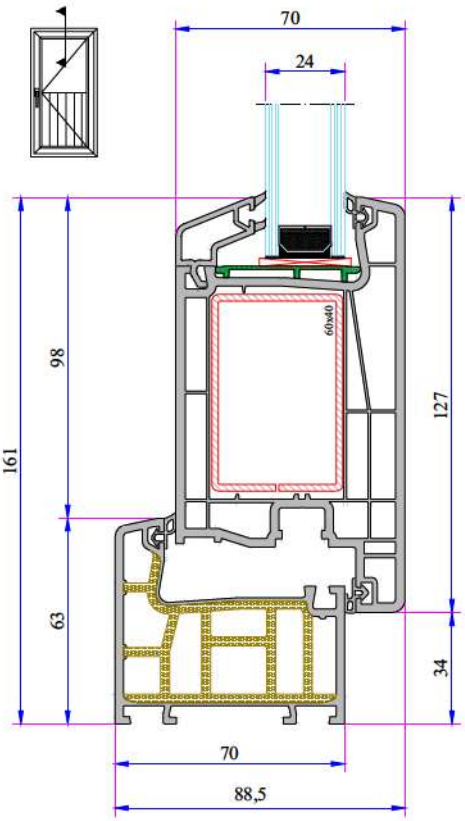

Outward Opening Super Door Sash - Frame Installation

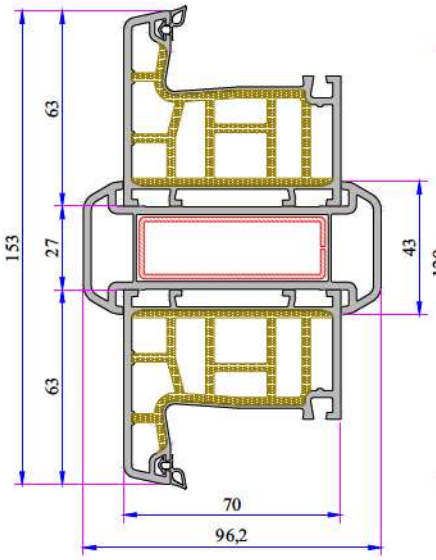

Large Coupling Profile Installation

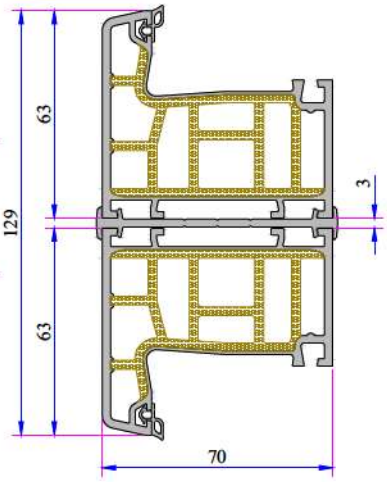

Narrow Coupling Profile Installation

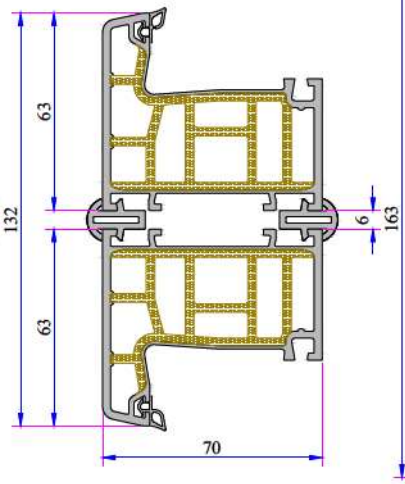

Short Coupling Installation

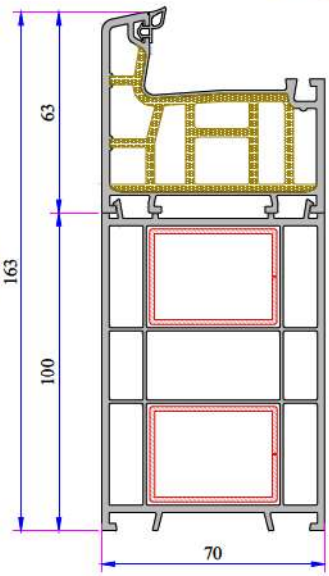

100 mm Frame Lifting Installation

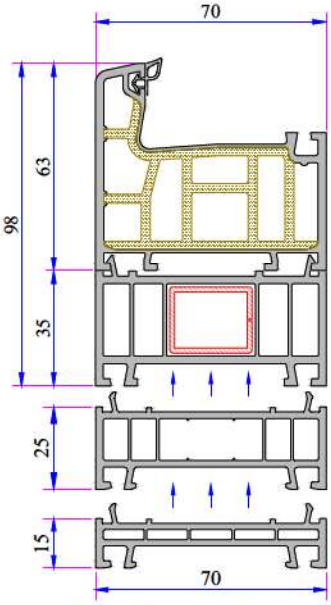

35 mm Frame Lifting Installation

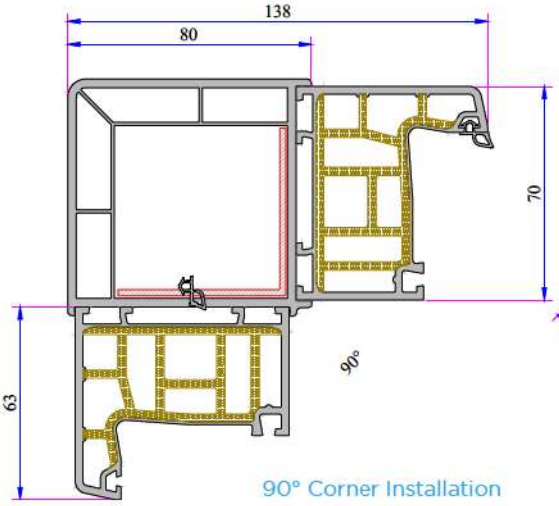

90° Corner Installation

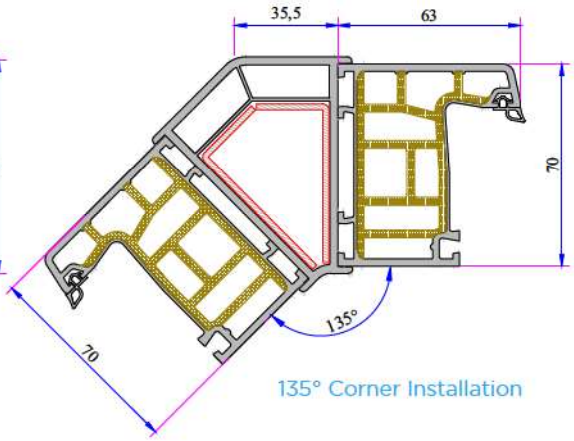

135° Corner Installation

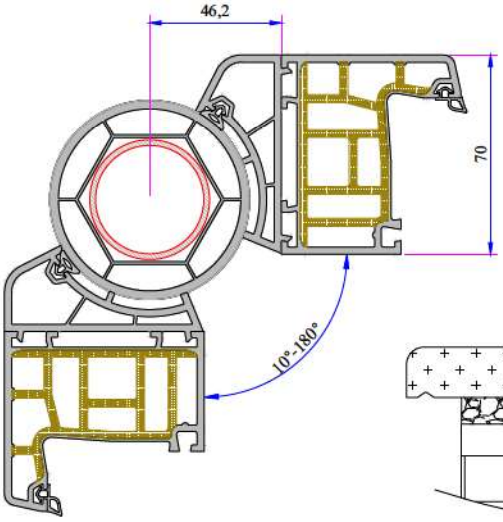

Corner Profile Installation

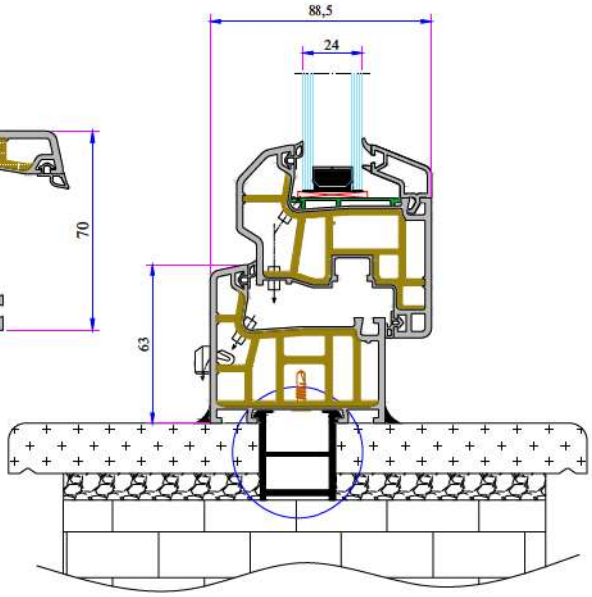

Frame Montage Profile Installation

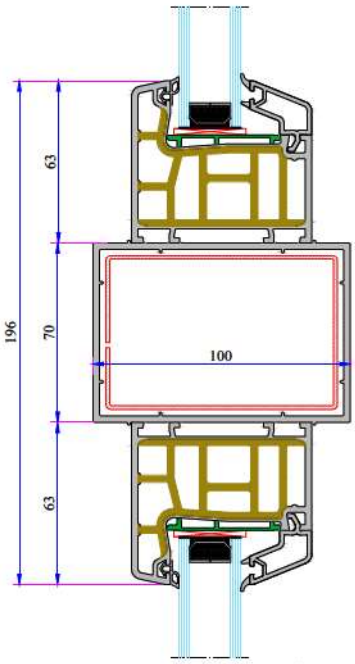

70x100 mm Box Profile Installation

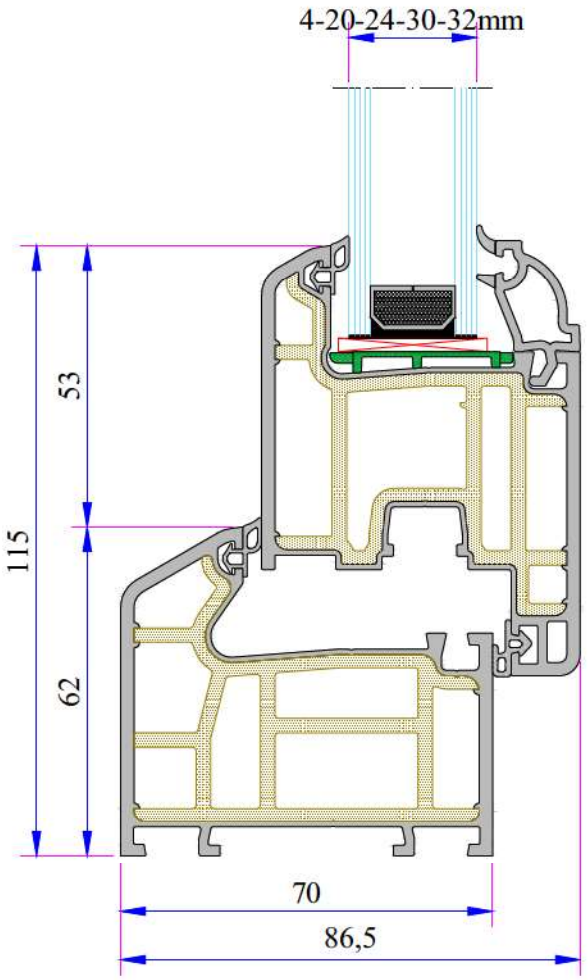

TECHNICAL

Penwood 760 SERIES
Profile Width: 70 mm
Number of chambers: 5 chambers system
Profile Class: B Class (TS EN 12608-1)
Seal Type: External / Internal double seal system
Seal Type and Color: TPE – Grey /Black
Glass Thickness (mm): 4, 20, 24, 30, 32 mm
The thermal insulation Uf: 1,26 W/m²K

INSTRUCTION

· 70 mm frame and 60 mm sash profile system. Because of the composite profile extruded together, no need for extra metal reinforcement inside.

· No need for reinforcement cutting unit, screwing Unit and workman.

· Compared with metal reinforcement system profile Penwood systems have %30 more advantages with max heat-sound and water insulation.

· Just cut and weld. You do not need Metal Reinforcement and extra stock area for Metal Reinforcement.

· Possibility to install single 4-6 mm or double glazing 20, 24, 28, 32 mm with different thickness of glazing bead.

· It has water drainage channel, it can be directly drilled after cutting.

· Color range for laminated products.

· It's quality is accredited by national and international certificates.

PENWOOD 760 SERIES
PVC PROFILE SYSTEM

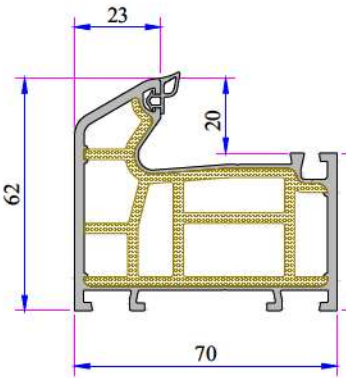

Frame Profile
706.1000.2

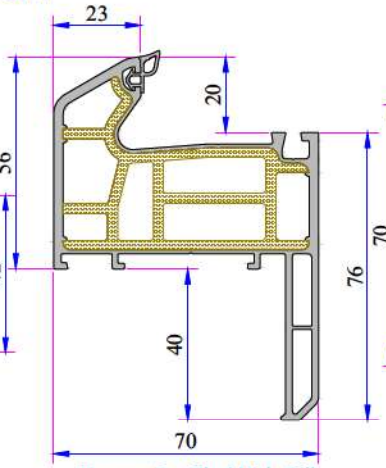

Frame Profile With Sill
706.1200.2

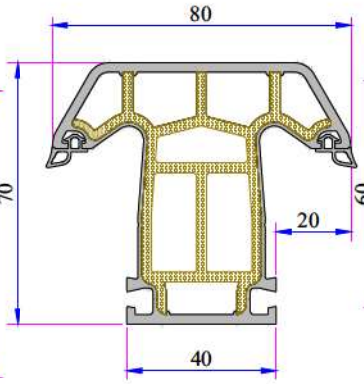

Mullion Profile
706.3000.2

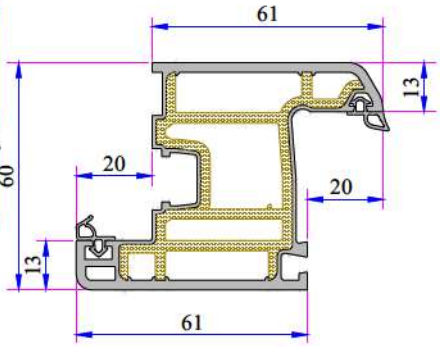

Sash Profile
632.2000.2

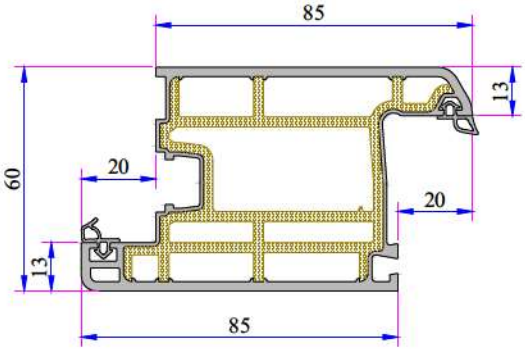

Door Sash Profile
632.2100.2

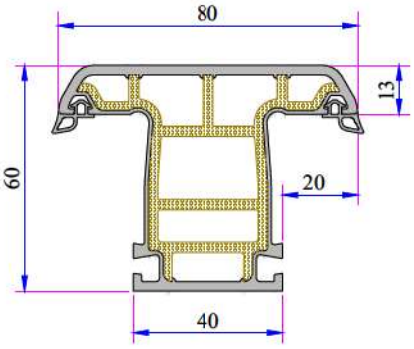

Mullion For Door Profile
632.3000.2

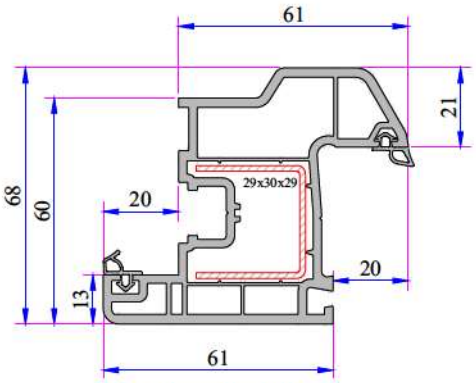

Offset Type Sash Profile
632.2200

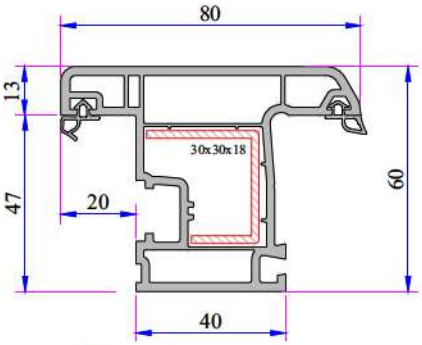

22 Axis. Outward Opening
Sash Profile
632.2014

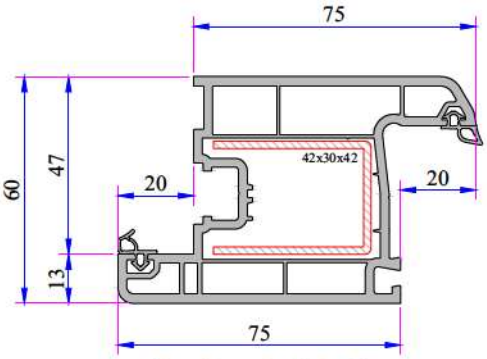

Eco Door Sash Profile
900.2107

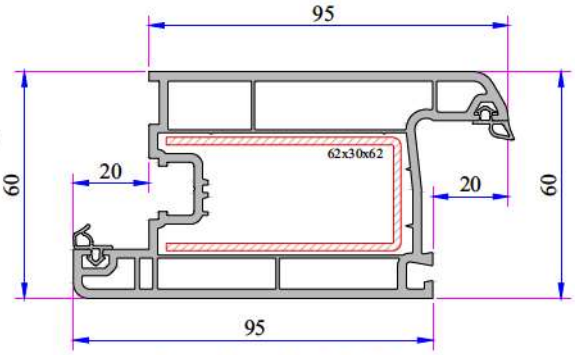

Super Door Sash Profile
900.2100

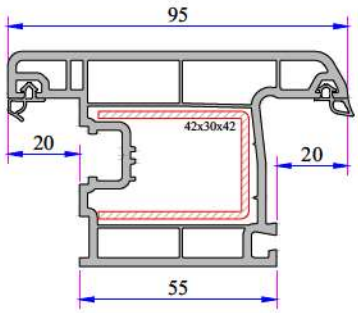

Eco Outward Opening Door
Sash Profile
632.2108

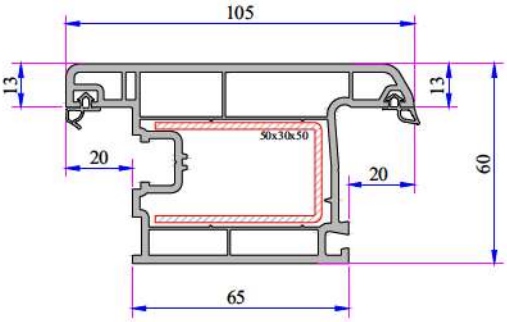

Outward Opening Door
Sash Profile
632.2101

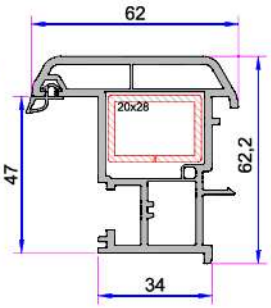

Lap Joint Profile
632.3104

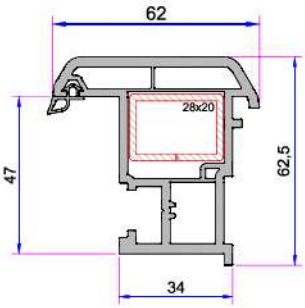

Lap Joint Profile
632.3100

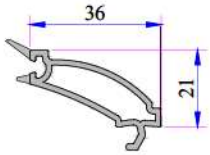

Single Glazing
Bead 4-6 mm
101.4002

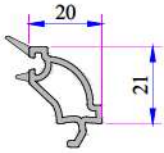

Dec. Double Glazing
Bead 20 mm
101.4102

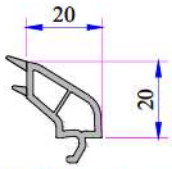

Double Glazing
Bead 20 mm
101.4100

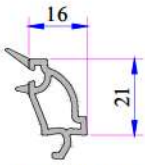

Dec. Double Glazing
Bead 24 mm
101.4202

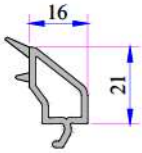

Double Glazing
Bead 24 mm
750.4500

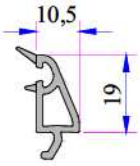

Triple Glazing Bead 30 mm
332.4100

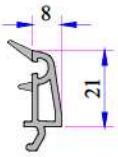

Triple Glazing Bead 32 mm
101.4500

** 760 series Frame and Mullion Profile Glazing Bead dimensions is different. For frame and Muliion Profile Glass size check page 170.

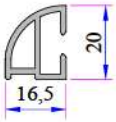

Offset Profile
900.6307.HC

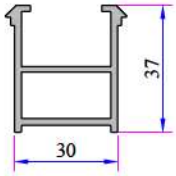

Frame Montage Profile
060.5301

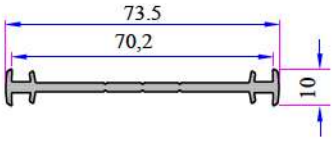

Narrow Coupling Profile
070.5001

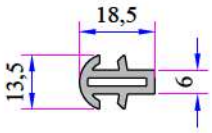

Coupling Profile
099.5003

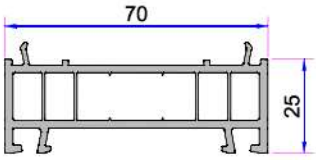

25mm Frame Lifting Profile
070.5306

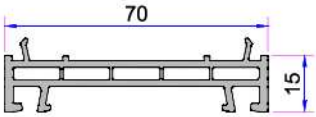

15mm Frame Lifting Profile
070.5304

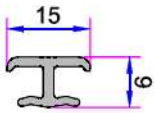

Universal Short
Coupling Profile
099.5004

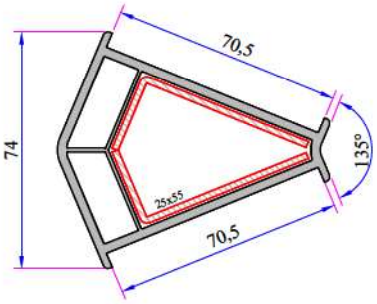

135° Corner Profile
070.5102

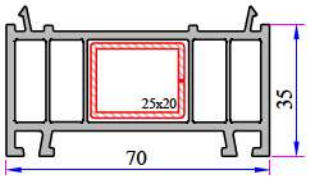

Frame Lifting Profile
070.5300

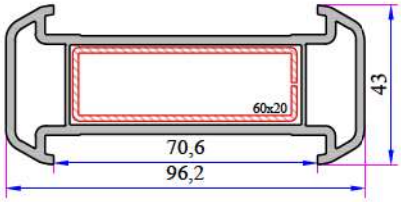

Large Coupling Profile
070.5000

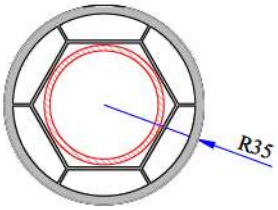

Pipe Profile
070.5106

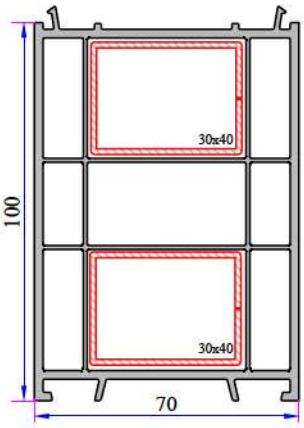

Frame Lifting Profile
070.5302 .19

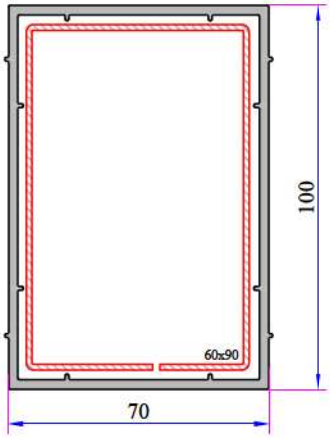

70x100 Box Profile
070.5202

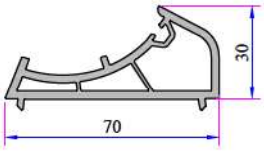

Angle Pipe Adaptor Profile
070.5104

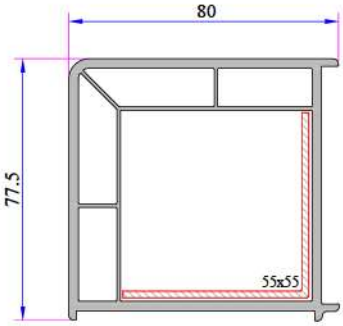

90° Corner Profile
070.5100

760 Penwood Re-Inforcement Profiles

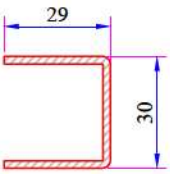

Offset Type Sash Profile Reinforcement
34022 - 12002

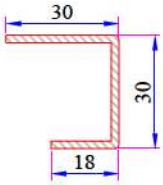

Outward Opening Sash Profile Reinforcement
34022 - 12022

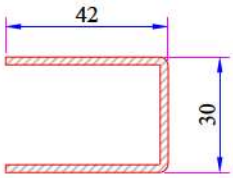

Eco Door Sash Outward Opening Profile Reintforcement
34022 - 12023

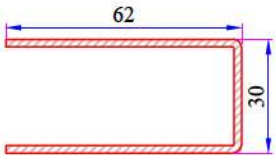

Super Door Sash Profile Reinforcement
34022 - 12029

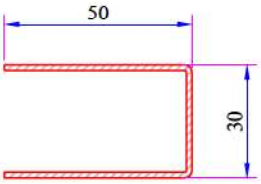

Outward Opening Door Sash Profile Reinforcement
34022 - 12013

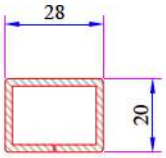

Lap Joint Profile Reinforcement
34022 - 12118

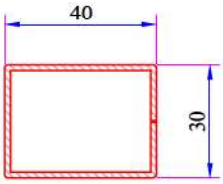

100 mm Frame Lifting Profile Reinforcement
34022-12120

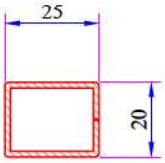

35 mm Frame Lifting Profile Reinforcement
34022 - 12104

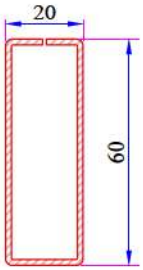

Large Coupling Profile Reinforcement
34022 - 12106

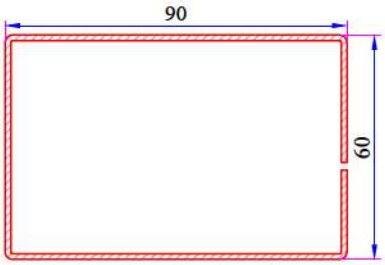

70x100 mm Box Profile Reinforcement
34022-12121

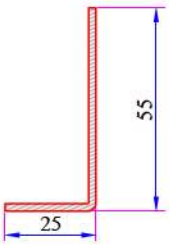

135° Corner Profile
34022 - 12303

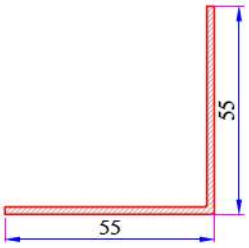

90° Corner Profile Reinforcement
34022 - 12305

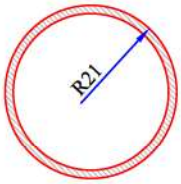

Pipe Profile Reinforcement
34022 - 12502

760 Penwood Installation

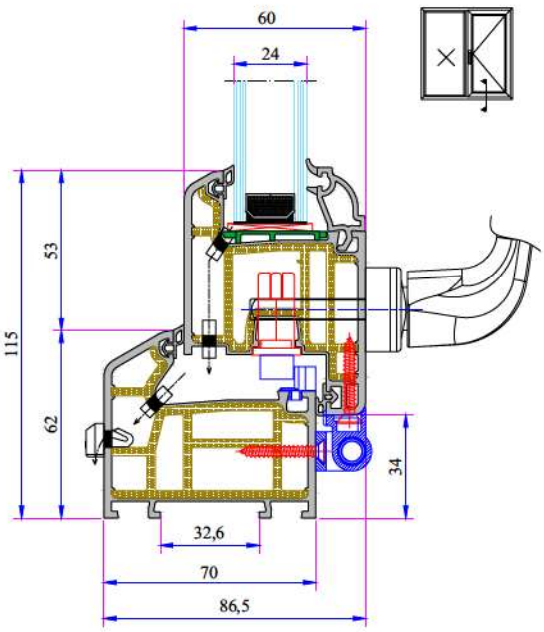

Frame - Sash Installation

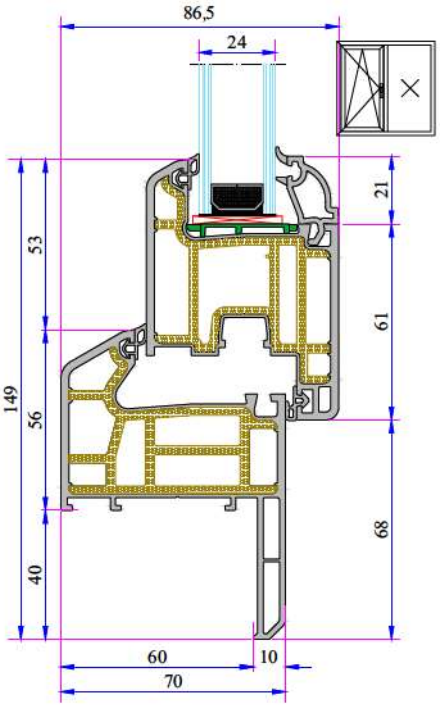

Frame With Sill and Sash

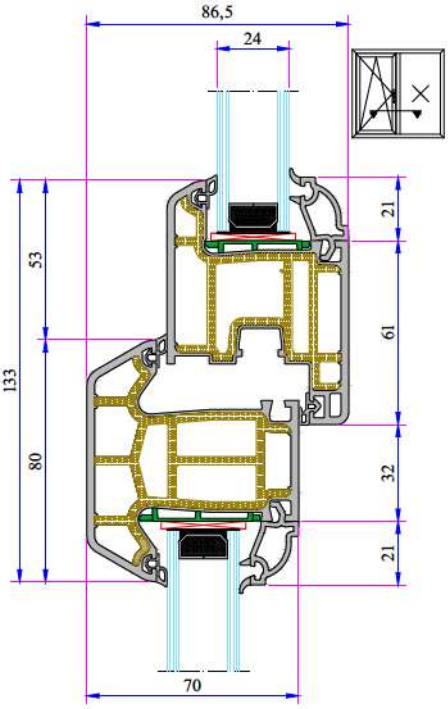

Mullion - Sash Installation

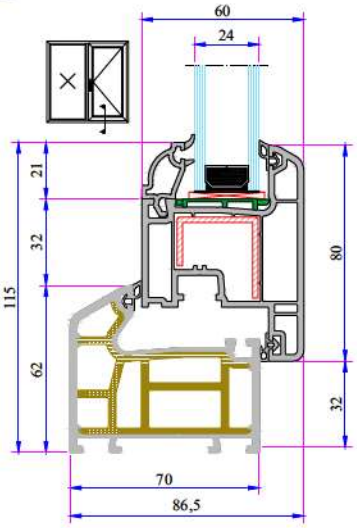

Frame - Outward Opening
Sash Installation

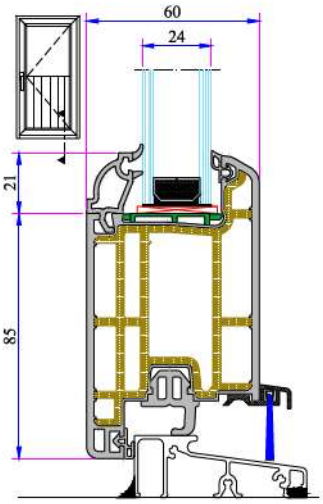

With Aluminium Threshold
Frame - Door Sash Installation

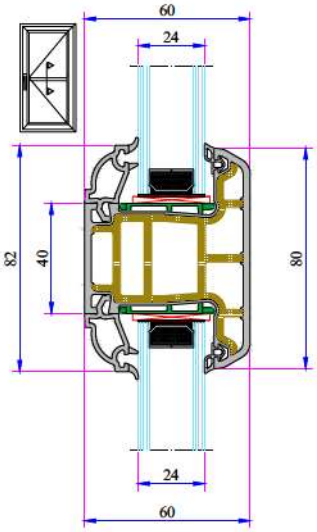

Door Sash - Mullion Installation

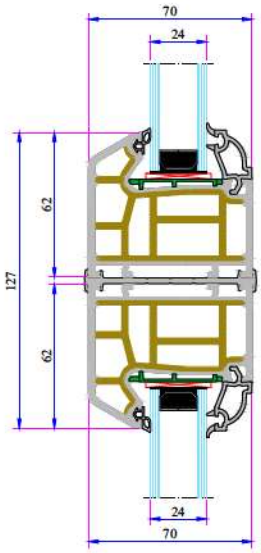

Narrow Coupling Profile
Installation

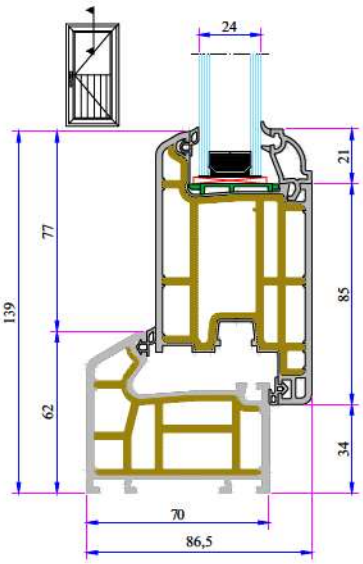

Frame - Door Sash Installation

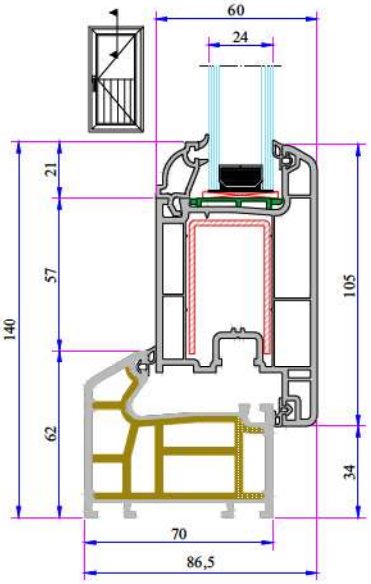

Frame - Outward Opening
Door Sash Installation

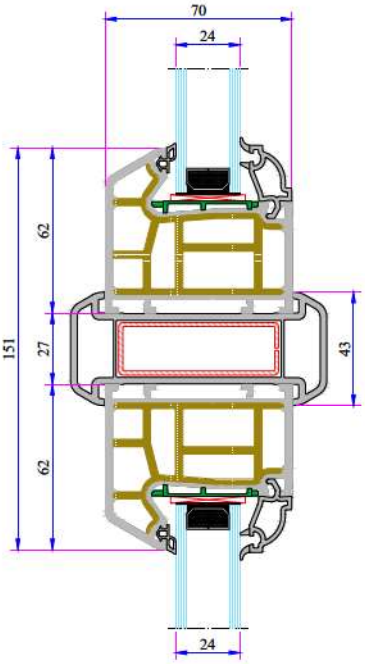

Large Coupling Profile
Installation

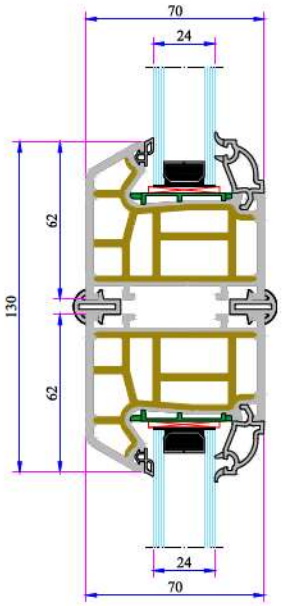

Short Coupling Profile Installation

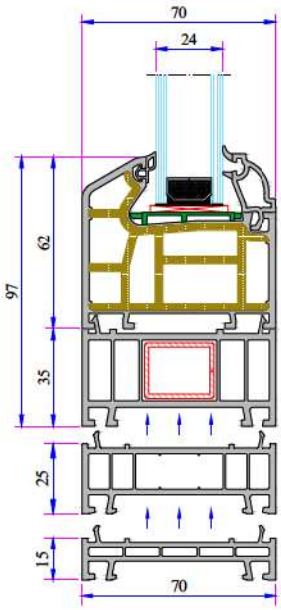

35 mm Frame Lifting Profile

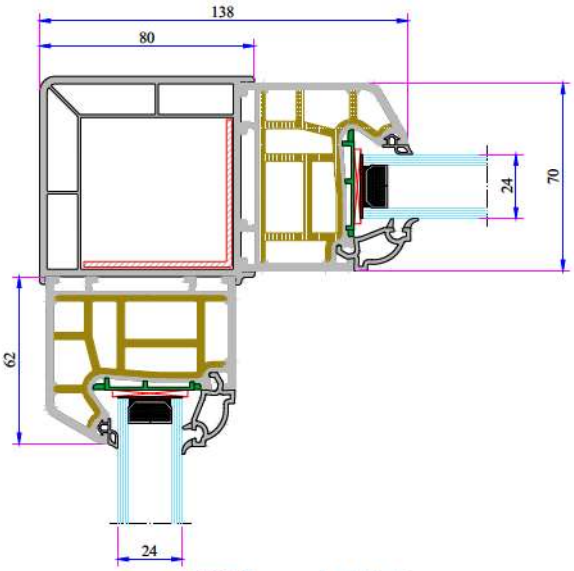

90° Corner Installation

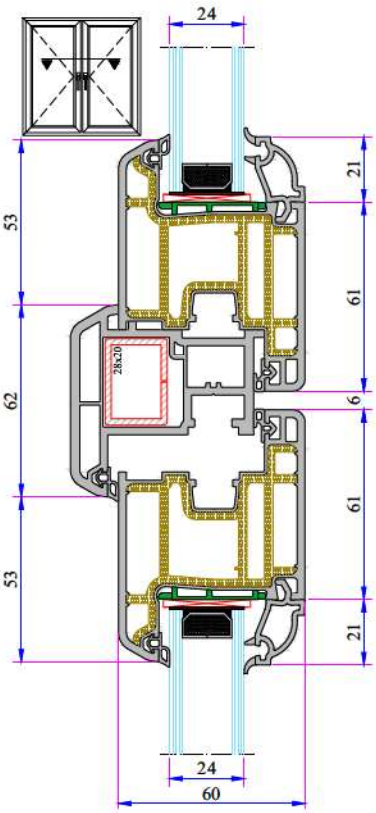

Sash - Lap Joint And Sash Installation

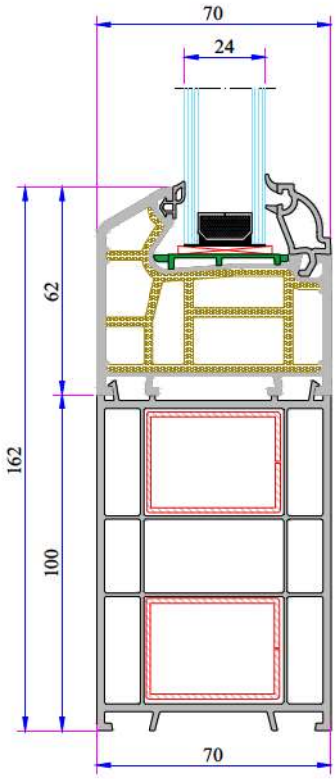

100 mm Frame Lifting Profile Installation

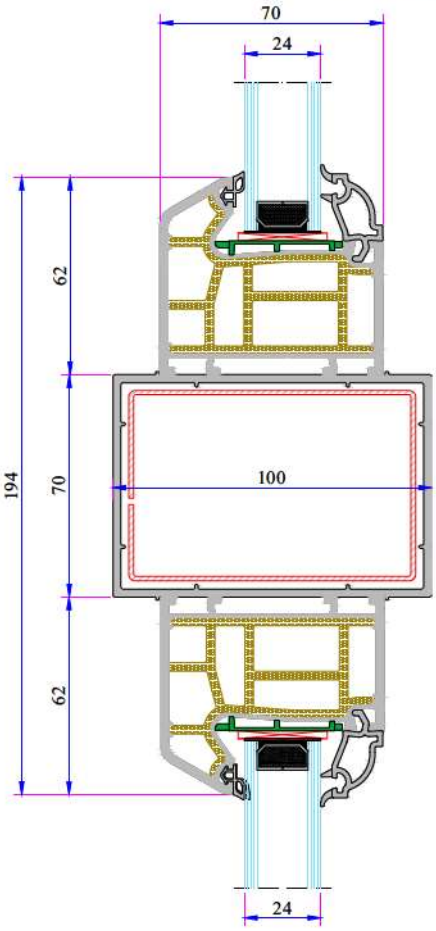

Box Profile Installation

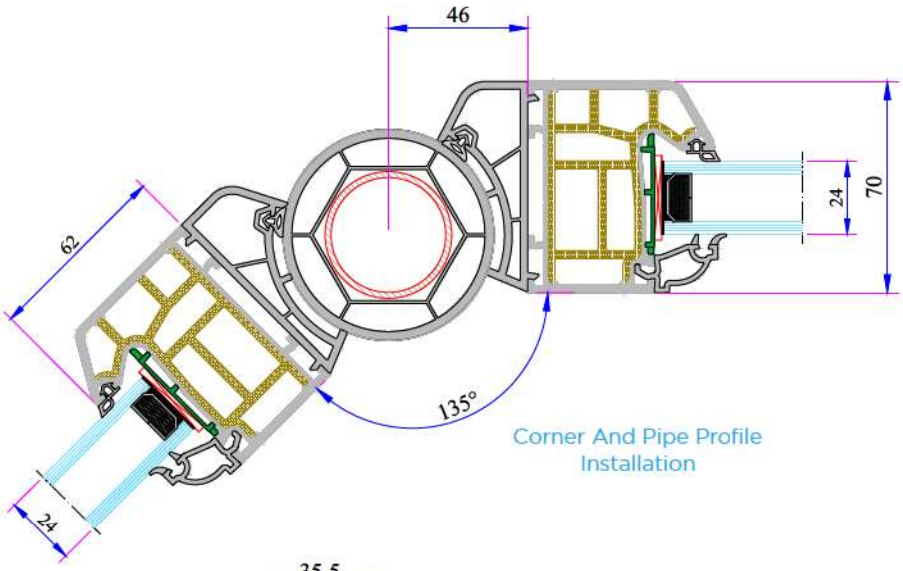

Corner And Pipe Profile Installation

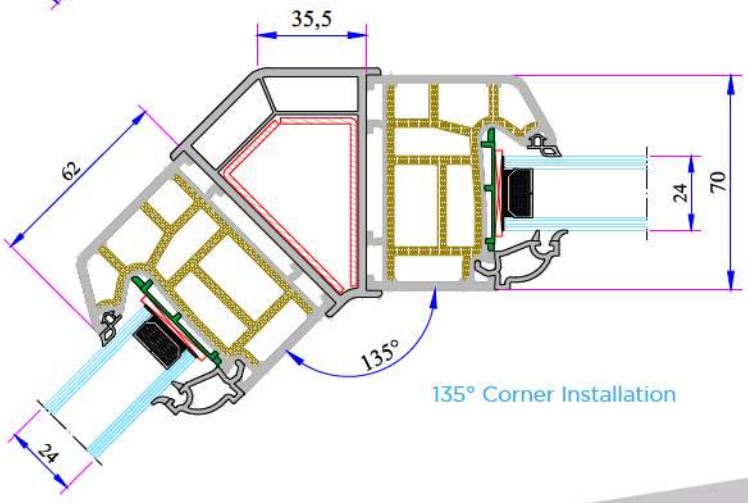

135° Corner Installation

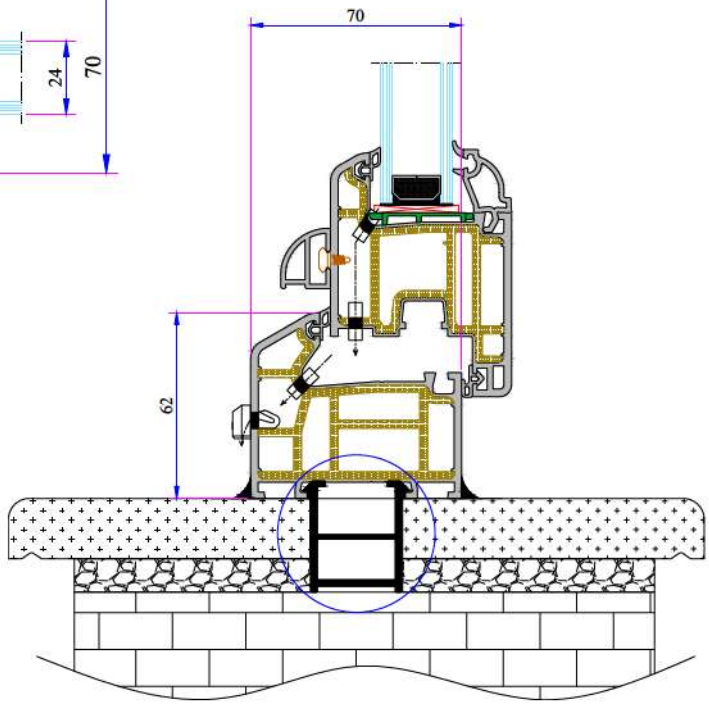

Offset Profile and Frame Montage Profile Installation

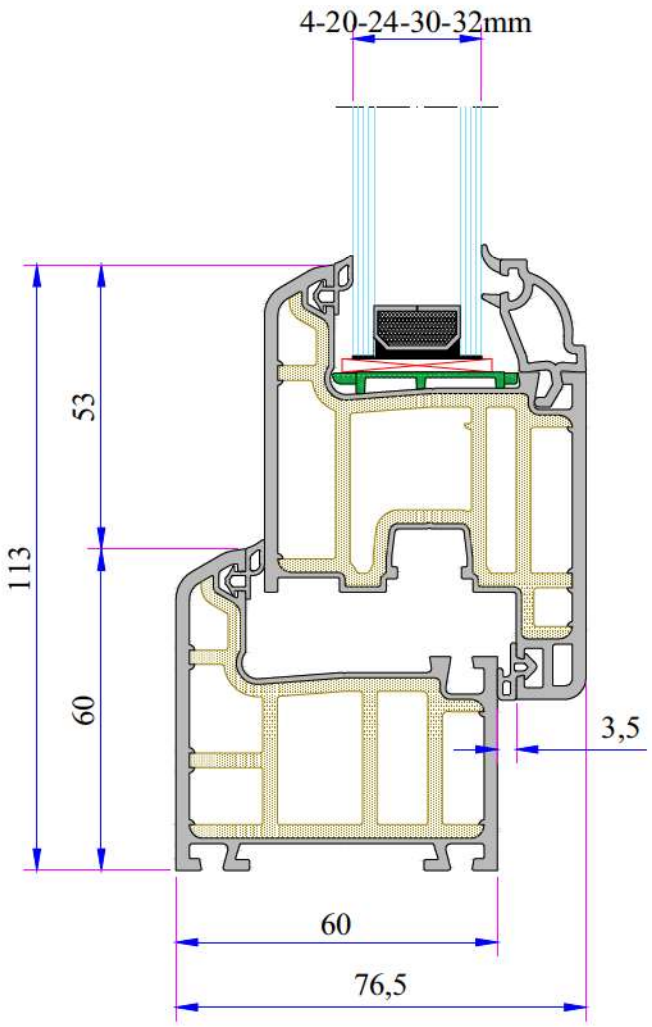

TECHNICAL

Penwood 632 SERIES
Profile Width: 60 mm
Number of chambers: 4 chambers system
Profile Class: B Class (TS EN 12608-1)
Seal Type: External / Internal double seal system
Seal Type and Color: TPE – Grey /Black
Glass Thickness (mm): 4, 20, 24, 30, 32 mm
The thermal insulation Uf: 1,30 W/m²K

INSTRUCTION

· 60 mm profile system. Because of the composite profile extruded together, no need for extra metal reinforcement inside.

· No need for reinforcement cutting units screwing unit and workman.

· Compared with metal reinforcement system profile Penwood systems have %30 more advantage with max heat - sound and water insulation.

· Just cut and weld. You do not need Metal Reinforcement and extra stock area for Metal Reinforcement.

· Possibility to install single 4-6 mm or double glazing 20, 24, 32 mm with different thickness of grey glazing bead.

· It has water drainage channel, it can be directly drilled after cutting.

· Color range for laminated products.

· It's quality is accredited by international certificate.

PENWOOD 632 SERİSİ
PVC PROFİL SİSTEMİ

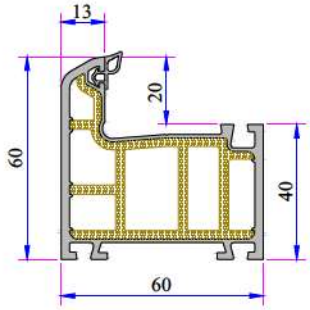

Frame Profile
632.1000.2

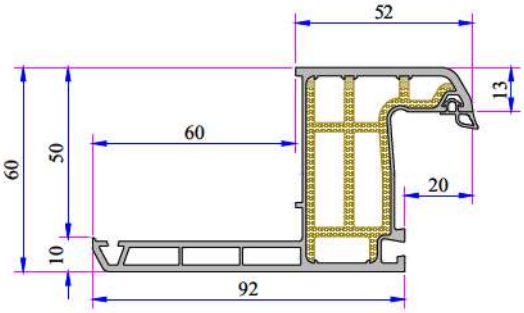

Frame Profile With Sill
632.1200.2
632.1200.2.PC (with Double Seal)

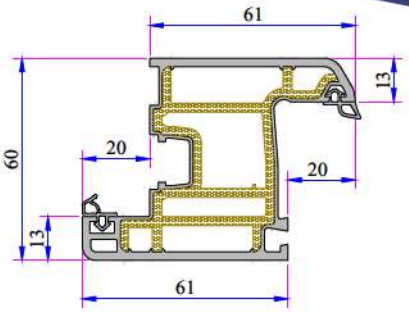

Sash Profile
632.2000.2

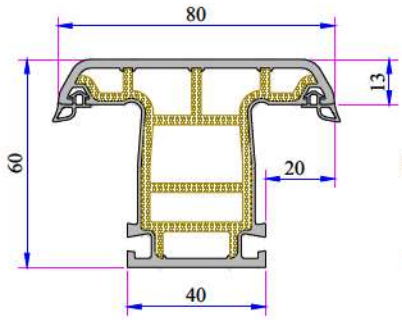

Mullion Profile
632.3000.2

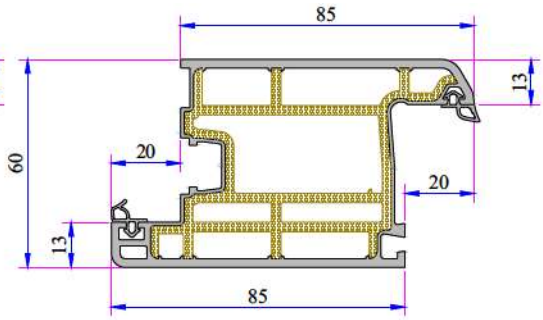

Door Sash Profile
632.2100.2

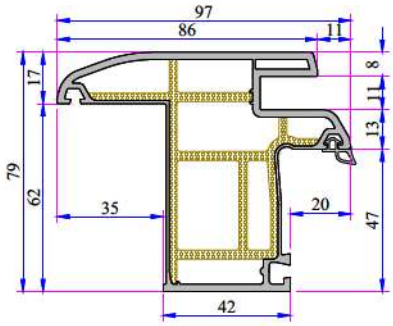

Shutter Rail Frame Profile
632.1206.2

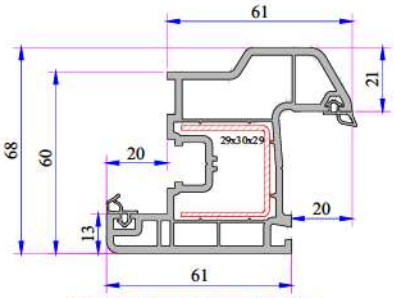

Offset Type Sash Profile Installation
632.2200

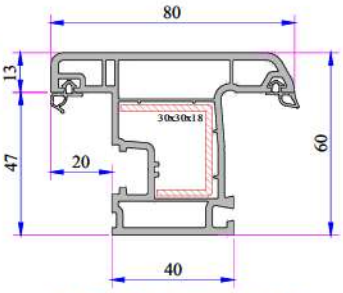

Outward Opening Sash Profile
632.2014

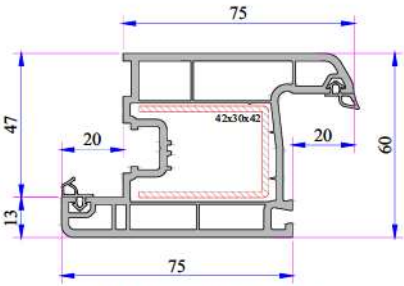

Eco Door Sash Profile
900.2107

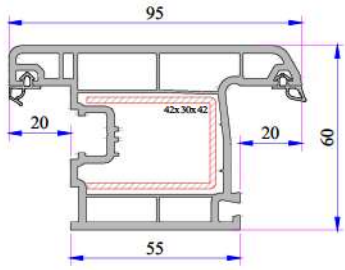

Eco Outward Opening Door Sash Profile
632.2108

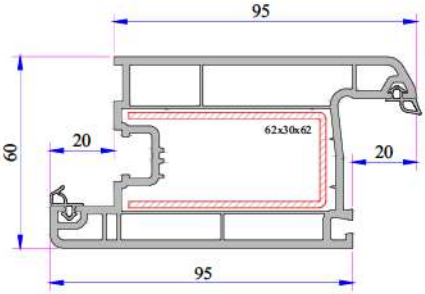

Super Door Sash Profile
900.2100

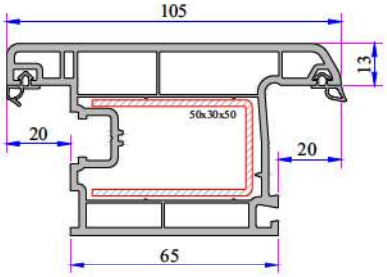

Outward Opening Door Sash Profile
632.2101

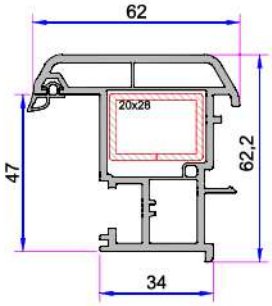

Lap Joint Profile
632.3104

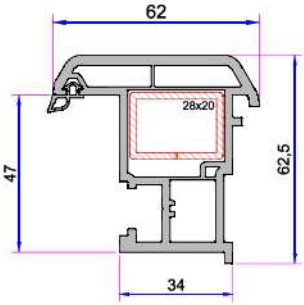

Lap Joint Profile
632.3100

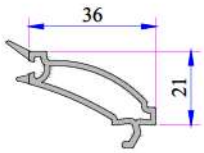

Single Glazing Bead 4-6 mm
101.4002

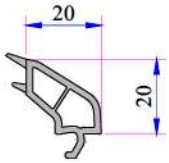

Double Glazing Bead 20 mm
101.4100

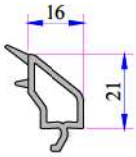

Double Glazing Bead 24 mm
750.4500

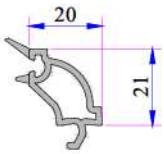

DEC. Double Glazing Bead 20 mm
101.4102

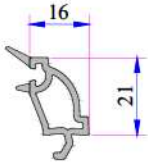

DEC. Double Glazing Bead 24 mm
101.4202

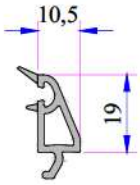

Triple Glazing Bead 30 mm
332.4100

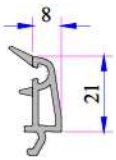

Triple Glazing Bead 32 mm
101.4500

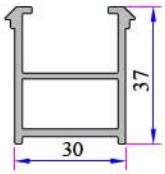

Frame Montage Profile
060.5301

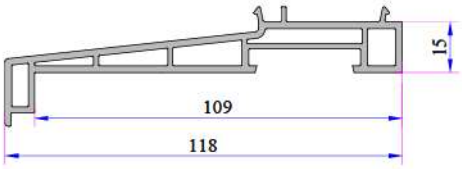

Sill Profile
058.5504

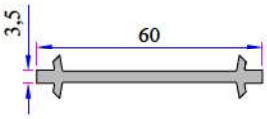

Narrow Coupling Profile
060.5001

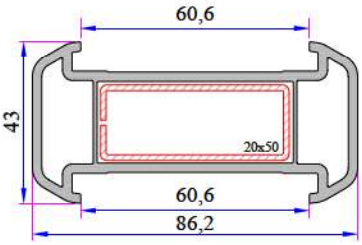

Large Coupling Profile
060.5000

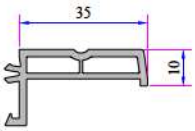

Frame Sill Profile (35mm)
099.5523

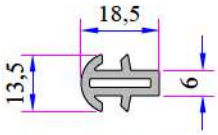

Coupling Profile
099.5003

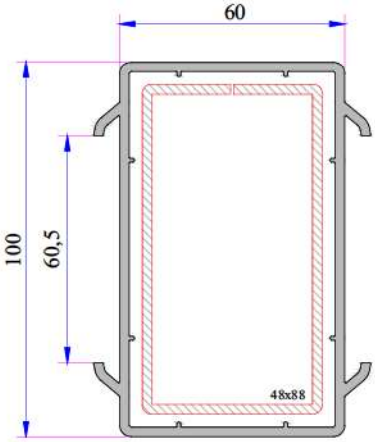

60x100 Spiked Box Profile
060.5203

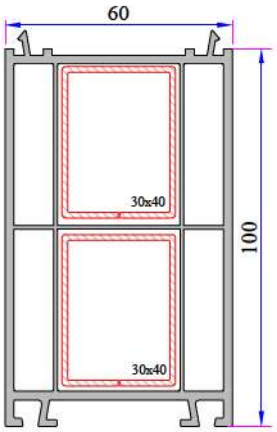

60x100 Frame Lifting Profile
900.5303

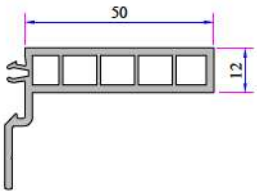

Frame Sill Profile (50mm)
099.5524

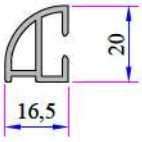

Offset Profile
900.6307

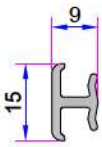

Universal Short Coupling Profile
099.5004

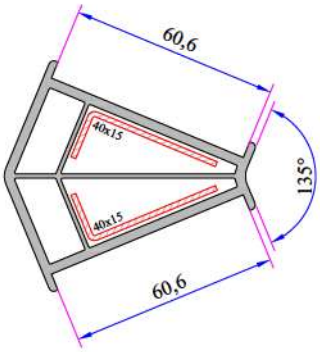

135° Corner Profile
060.5102

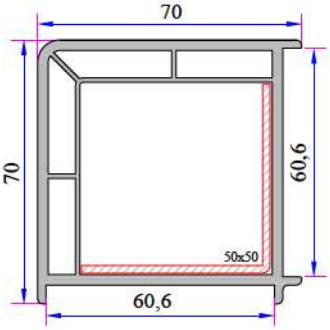

90° Corner Profile
060.5100

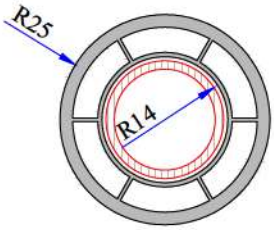

Angle Pipe Profile
050.5106

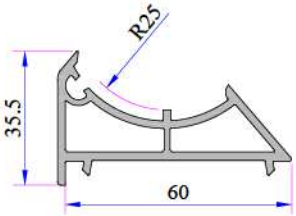

Angle Pipe Adaptor Profile
060.5104

Universal Large Coupling Cover Profile
058.5707

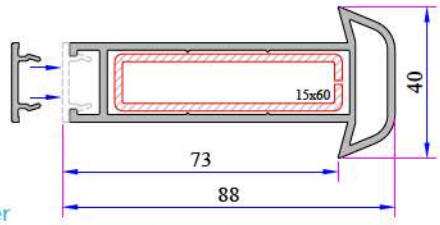

Universal Large Coupling Profile
058.5000

632 Penwood Re-Inforcement Profiles

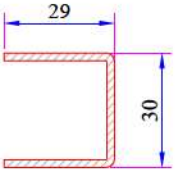

Offset Type Sash Profile Reinforcement
34022-12002

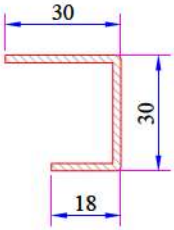

Outward Opening Sash Profile Reinforcement
34022 - 12022

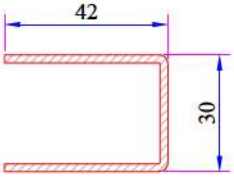

Eco Door Sash Outward Opening Profile Reintforcement
34022-12023

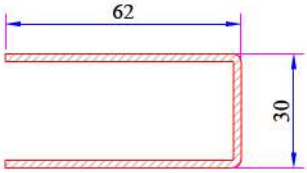

Super Door Sash Profile Reinforcement
34022 - 12029

PENWOOD 632 SERİSİ
PVC PROFİL SİSTEMİ

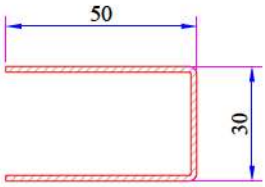

Outward Opening Door Sash Profile Reinforcement
34022-12013

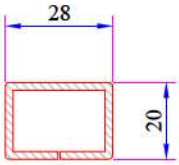

Lap Joint Profile Reinforcement
34022-12118

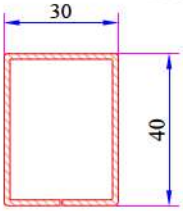

100 mm Frame Lifting Profile Reinforcement
34022-12120

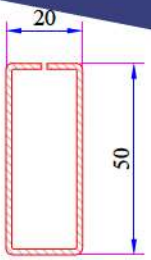

Large Coupling Profile Reinforcement
34022-12105

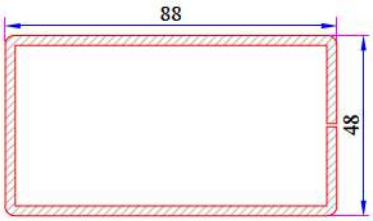

70x100 mm Box Profile Reinforcement
34022-12102

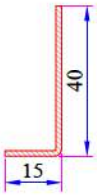

135° Corner Profile Reinforcement
34022-12301

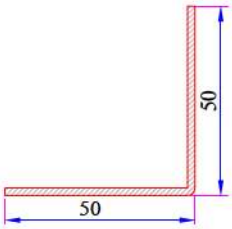

90° Corner Profile Reinforcement
34022-12302

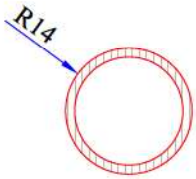

Pipe Profile Reinforcement
34022-12503

632 Penwood Installation

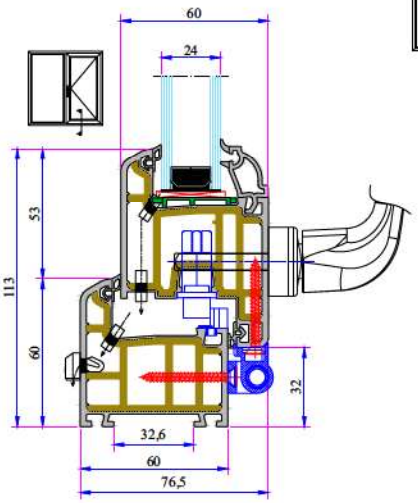

Frame-Sash Installation

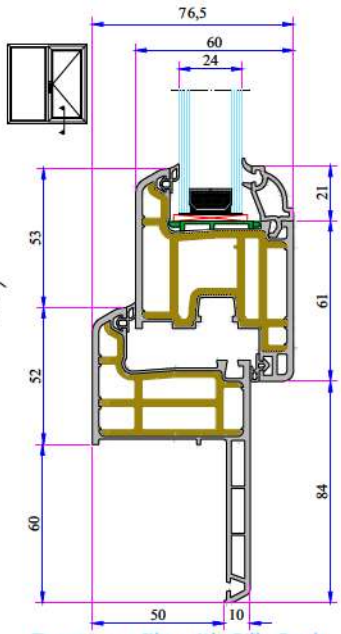

Frame profile with Sill- Sash Installation

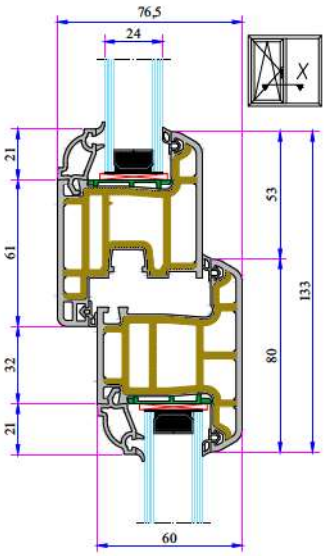

Mullion Sash Profile Installation

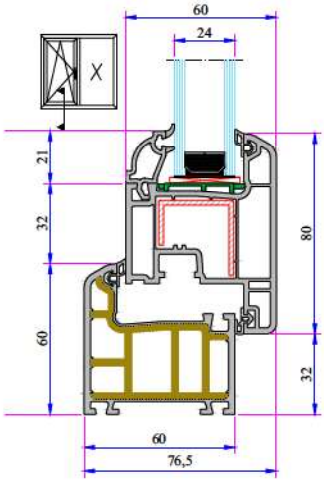

Frame - Outward Opening Sash Installation

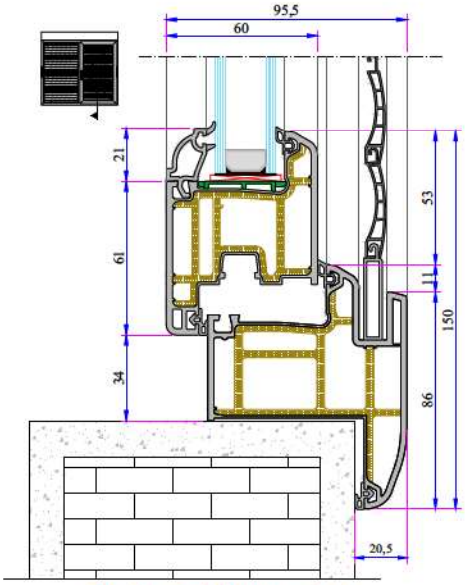

Shutter Rail Frame - Sash Installation

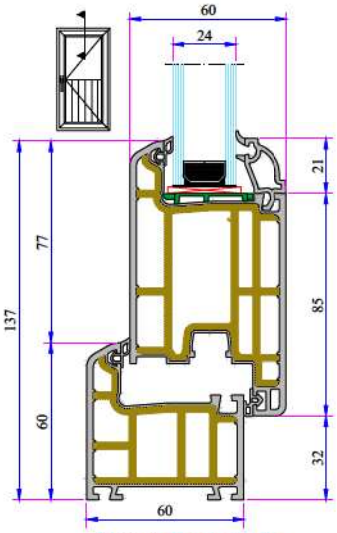

Frame Door Sash Installation

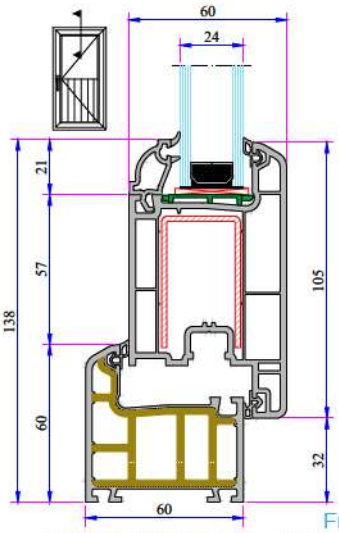

Frame -Outward Opening Door Sash Installation

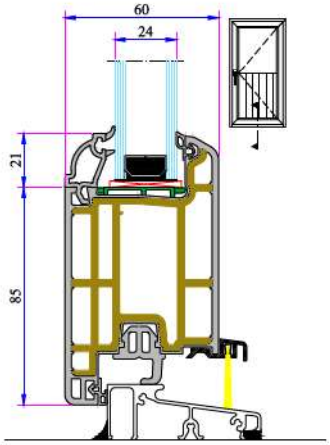

Frame with Aluminium Threshold - Door Sash Installation

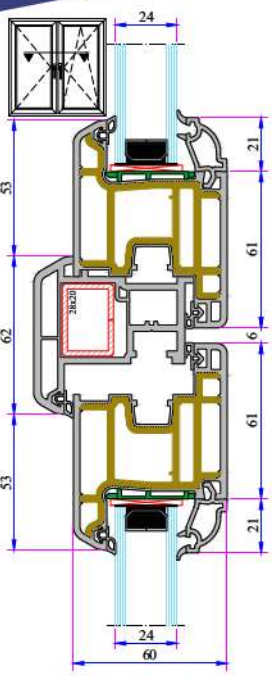

Sash - Lap Joint Installation

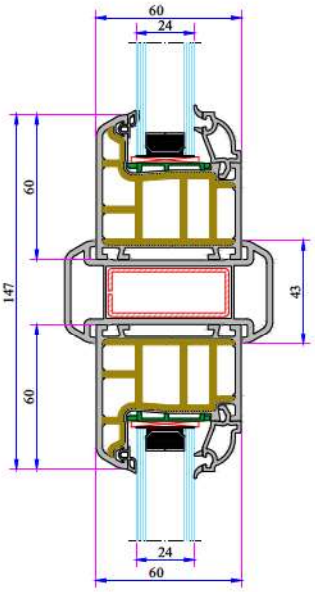

Large Coupling Installation

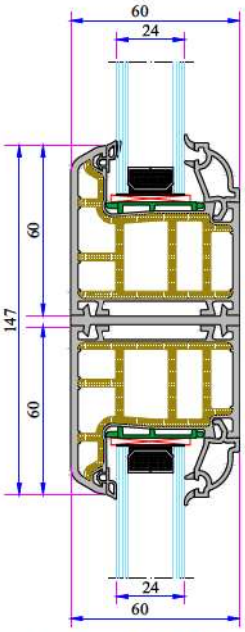

Coupling Installation

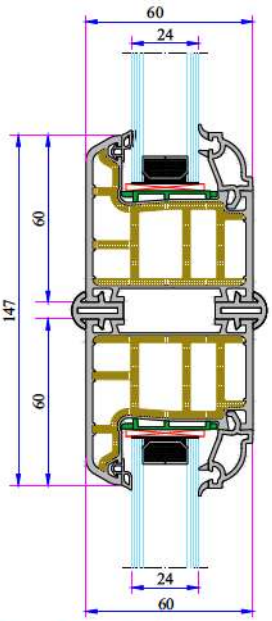

Short Coupling Installation

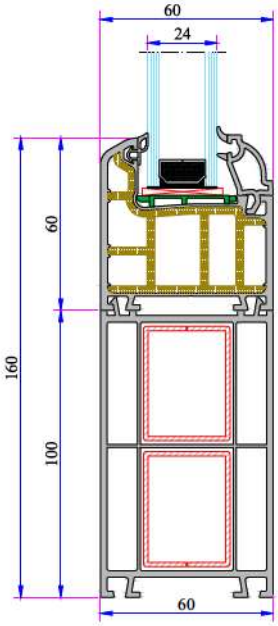

100 mm Frame Lifting Profile Installation

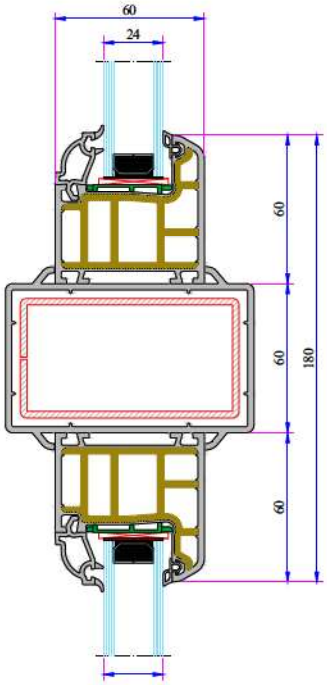

Spiked Box Profile Installation

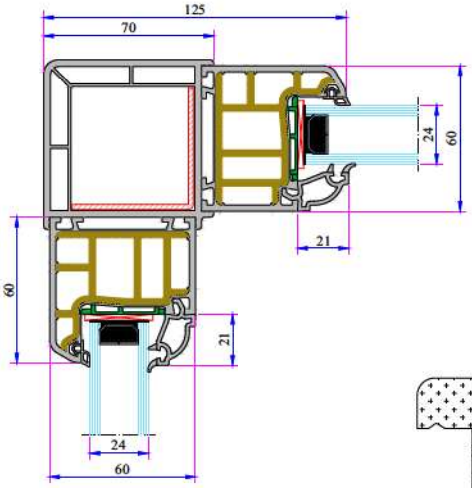

90° Corner Profile Installation

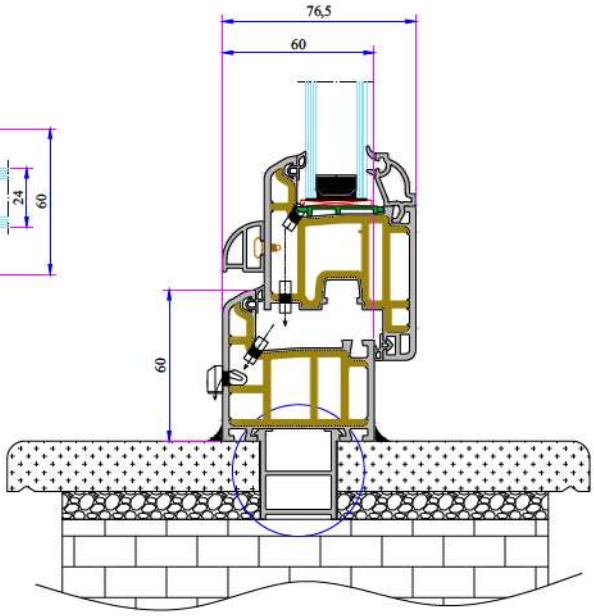

Offset Profile and Frame Montage Profile Installation

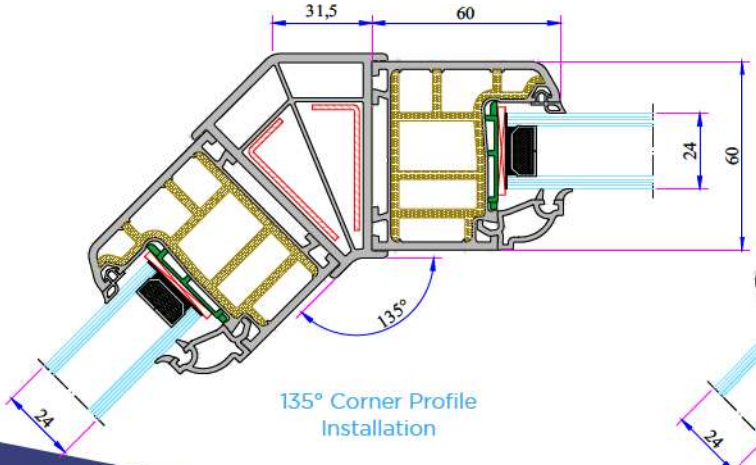

135° Corner Profile Installation

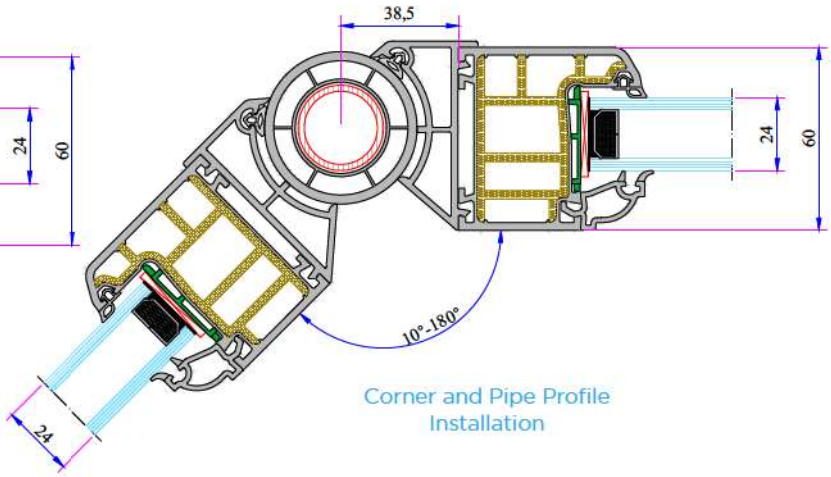

Corner and Pipe Profile Installation

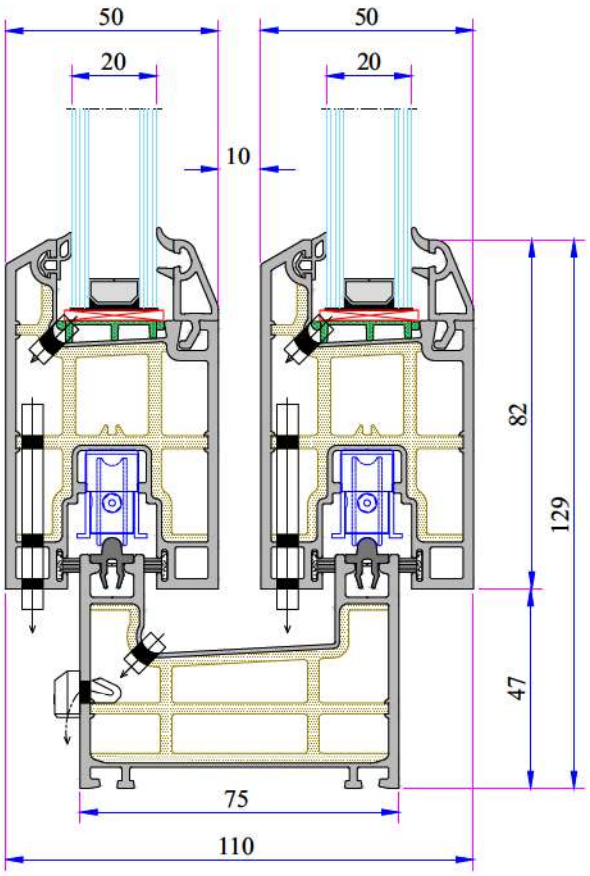

TECHNICAL

PENWOOD 232 SLIDING SERIES

Profile Width: 75 mm double rail frame an 92,5mm single rail frame, 50mm sliding system sash profile

Number of chambers: 3 chambers system

Profile Class: B Class (TS EN 12608-1)

Seal Type: The insulated bristle wick system

Glass Thickness (mm): 4-6, 20, 24 mm

The thermal insulation Uf: 1,43 W/m²K

INSTRUCTION

· 75 mm double rail frame and 92,5 mm single rail frame, 50mm sliding system sash profile.

· No need for reinforcement cutting screwing unit and workman.

· Compared with metal reinforcement system profile Penwood systems have % 30 more advantage with max heat - sound and water insulation.

· Just cut and weld. You do not need Metal Reinforcement and extra stock area for Metal Reinforcement.

· It has water drainage channel, it can be directly drilled after cutting.

· The medium locked sash with a seal system.

· Application of single glaze (4-6 mm) and insulating glass 20-24 mm by grey sealed glazing beads in different tickness.

· In addittion to main white profile, it has a different laminated color range.

· It's quality is accredited by national and international certificate.

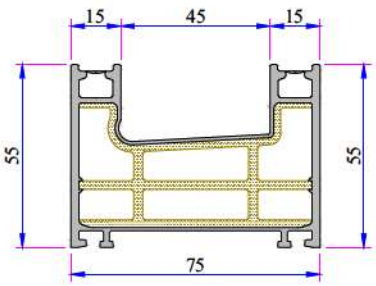

Frame Profile (Double Rail)
232.1106.2

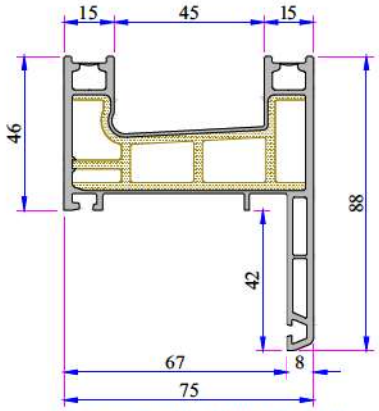

Frame Profile With Flat Sill
232.1110.2

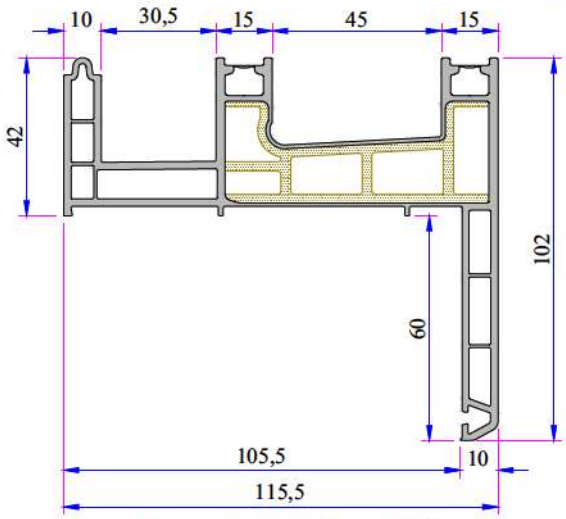

Frame With Fly-Screen&Sill
232.1109.2

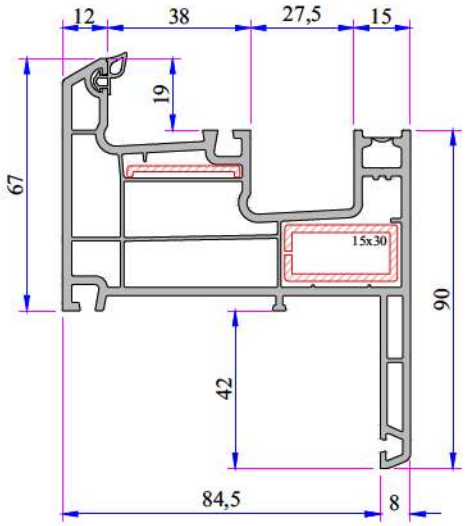

Frame Profile With Sill (Single Rail)
232.1114

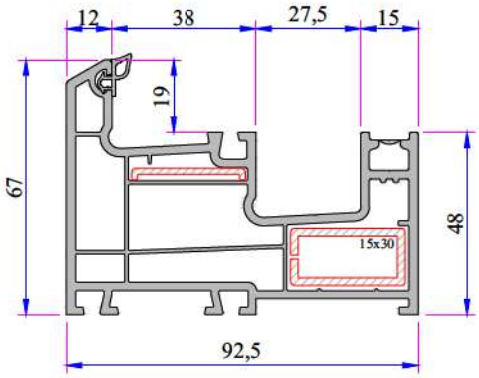

Frame Profile (Single Rail)
232.1105

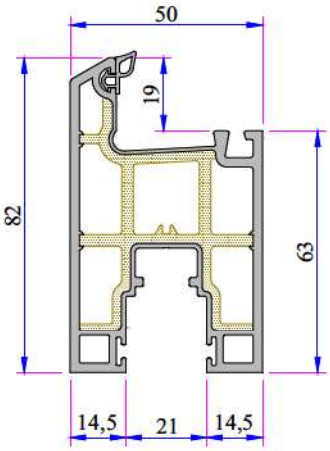

Penwood Sliding System Sash Profile
232.2300.2 (with Brush)
232.2301.2 (without Brush)

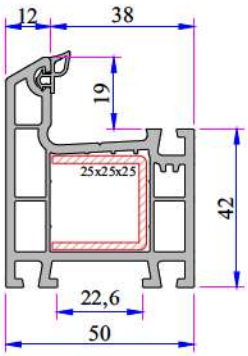

332 Frame Profile
332.1000

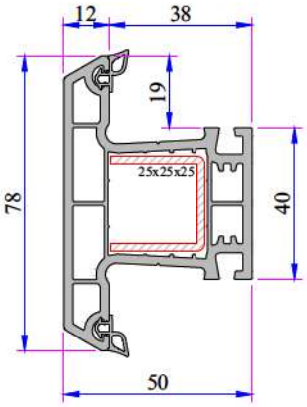

332 Mullion Profile
332.3000

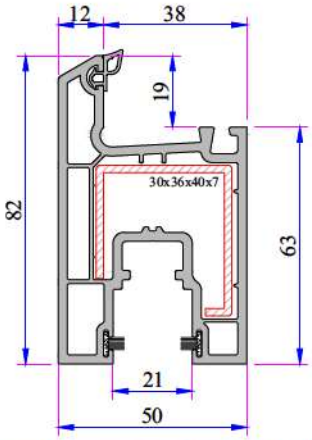

Sliding System Sash Profile(Static)
232.2308 (with Brush)
232.2309 (without Brush)

Double Rail Adaptör Profile
232.5800

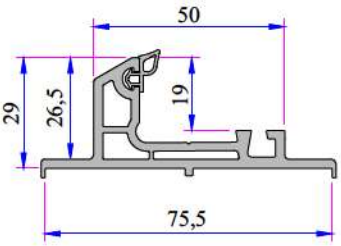

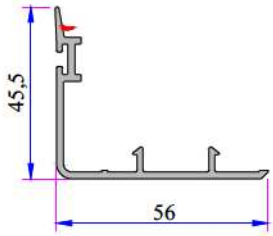

Sash Cover Profile
232.5709

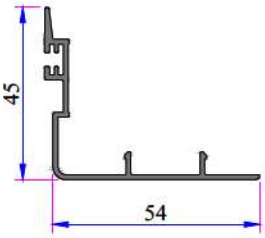

Alm. Sash Cover Profile
16051.601.5.1.1.9016

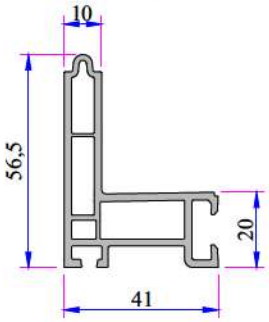

Screen Adaptör Profile
232.5802

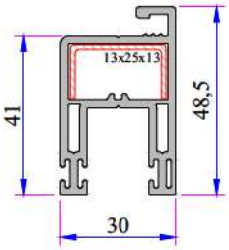

Sliding Screen Sash Profile
242.2305

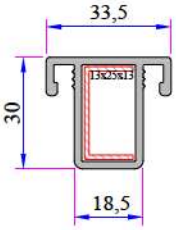

Sliding Screen Mullion Profile
242.3200

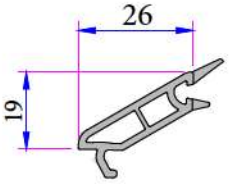

Single Glazing Bead (4mm)
332.4000

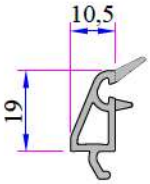

Double Glazing Bead (20mm)
332.4100

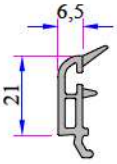

Double Glazing Bead (24mm)
532.4500

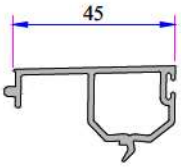

PVC Cover Profile
232.5710

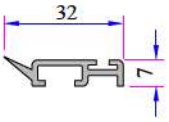

Lap Strip Profile
232.5801

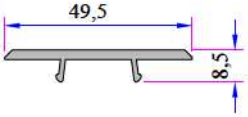

PVC Sash Cover Profile
232.5704

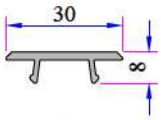

Screen Sash Cover Profile
242.5701

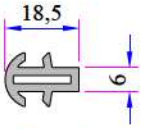

Short Coupling Profile
099.5003

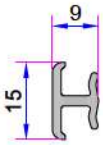

Universal Short Coupling Profile
099.5004

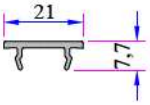

Universal Large Coupling Cover Profile
058.5707

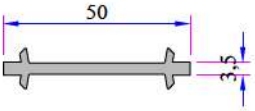

Narrow Coupling Profile
050.5001

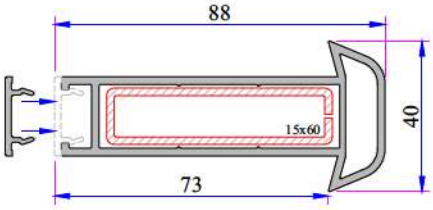

Universal Large Coupling Profile
058.5000

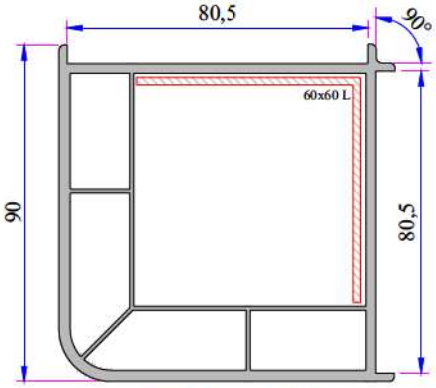

90° Corner Profile
080.5100

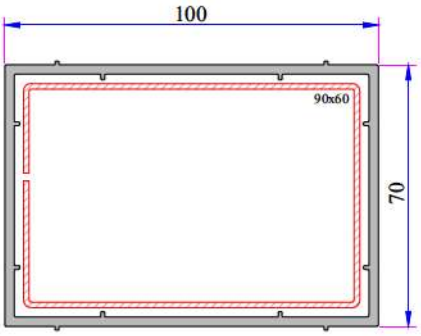

Box Profile (70*100)
070.5202

Alm. Sliding Rail Profile
16014.601.5 000

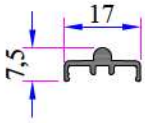

Alm. Sliding Rail Profile
11053.601.5.2 000

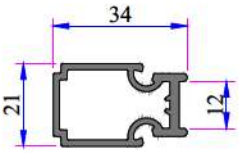

Alm. Double Rail Adaptor Profile
AD16-011

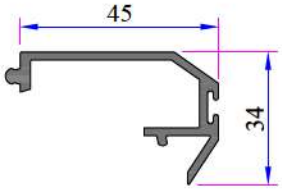

Alm. Cover Profile
16013.601.5.2 000

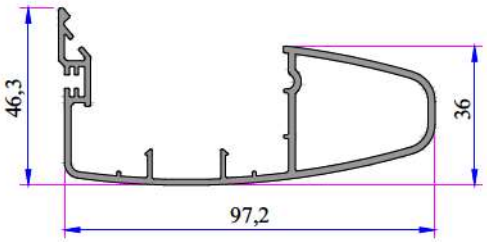

Sash Cover Grillage Profile
16028.601.5.2 000

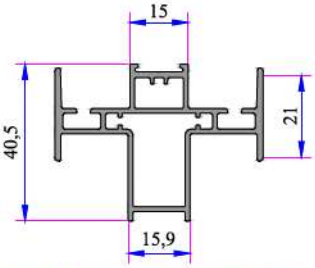

With Alum. Lug Double Sash Middle Adaptor (In Process)

PENWOOD 232 SLIDING SERIES
PVC PROFILE SYSTEM

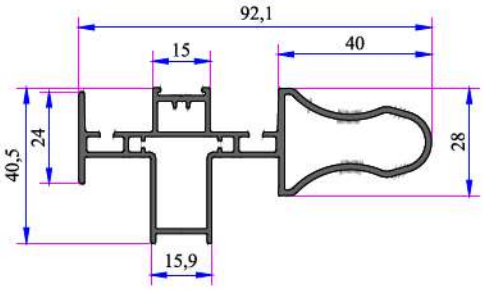

With Alum. Grillage Double Sash Middle Adaptor (In Process)

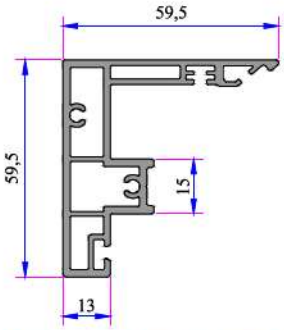

Alum. Sliding Mullion with 3 Chambered (In Process)

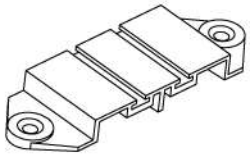

Sealing Bit Single Rail
34009-26020

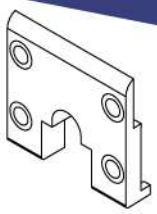

Sliding Sash End Bit
34009-46010

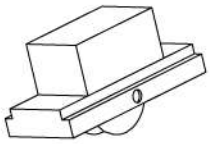

Sliding Roller Plastic
34009-17010

Upper bedding Piece for Sliding Rail
34009-36010

W 232 Sliding Re-Inforcement Profiles

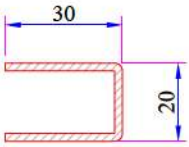

Double Rail Frame Profile Reinforcement
34022-12006

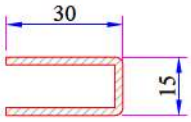

Frame Profile with Sill - Frame Profile with Flat Sill Reinforcement
34022-12034

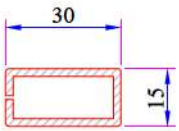

Frame Profile (Single Rail)- Frame Profile With Sill (Single Rail) Reinforcement
34022-12125

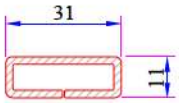

Frame With Fly-Screen&Sill Reinforcement
34022-12107

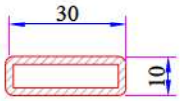

Frame With Internal Fly-Screen Reinforcement
34022-12107

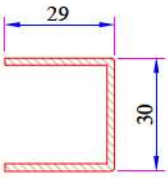

Sliding System Sash Profile Reinforcement
34022-12002

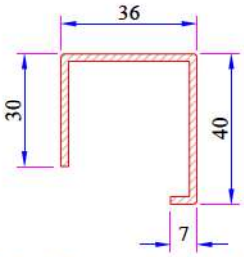

Sliding System Sash Profile (Static) Reinforcement
34022-12107

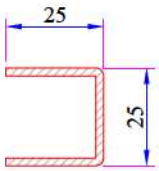

332 Frame- Mullion Profile Reinforcement
34022-12003

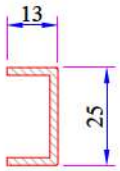

Fly-Screen Sash - Fly-Screen Mullion Profile Reinforcement
34022-12008

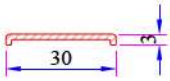

Frame Profile (Single Rail)- Frame Profile With Sill (Single Rail) Reinforcement
34022-12035

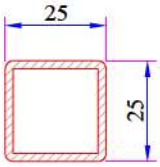

Mullion Profile Static Reinforcement
34022-12122

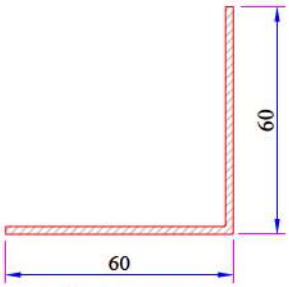

90° Corner Profile Reinforcement
34022-12306

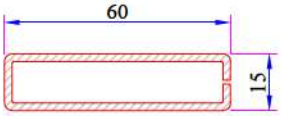

Universal Large Coupling Profile Reinforcement
34022-12123

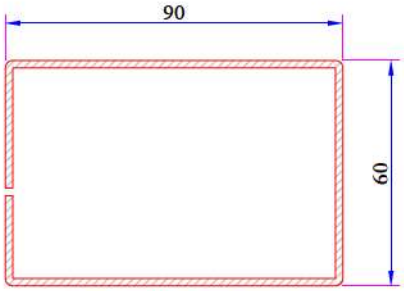

Box Profile Reinforcement
34022-12121

Penwood 232 Sliding Installation

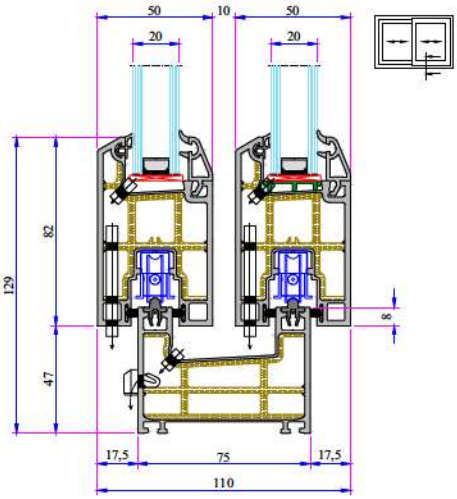

Sliding Frame Sash Double Rail Installation

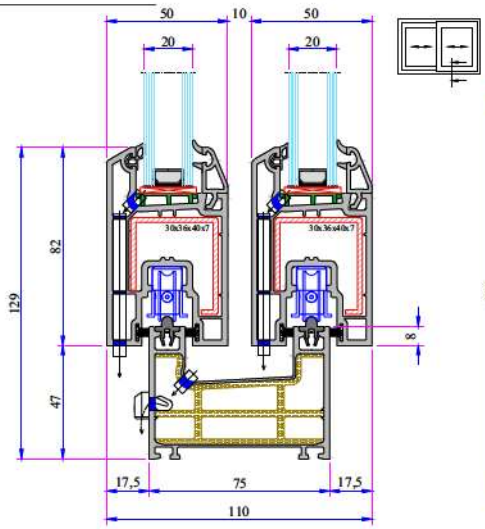

Sliding Frame Static Sash Double Rail Installation

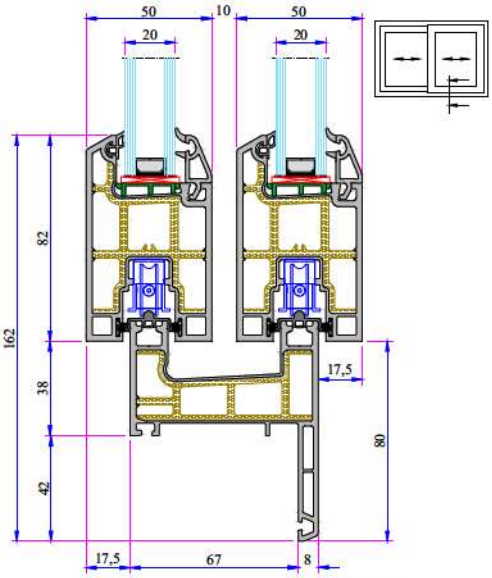

Double Sliding Frame with Sill - Sash Installation

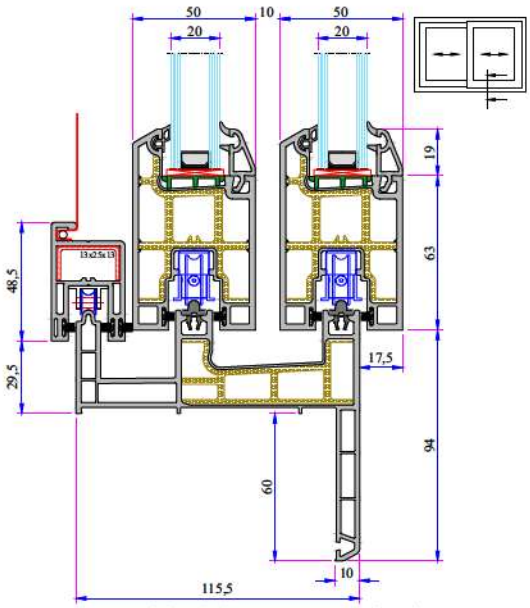

Double Sliding Frame with Sill (60mm) - Sash Installation

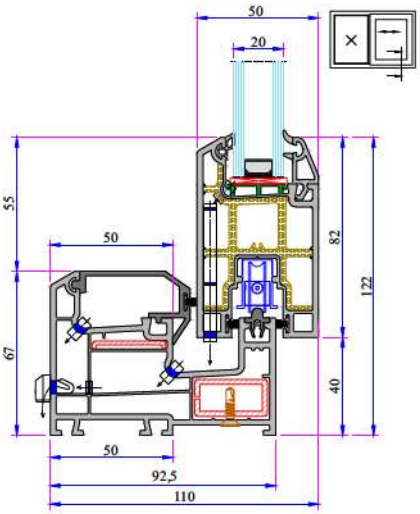

Sliding Frame Sash Single Rail Installation

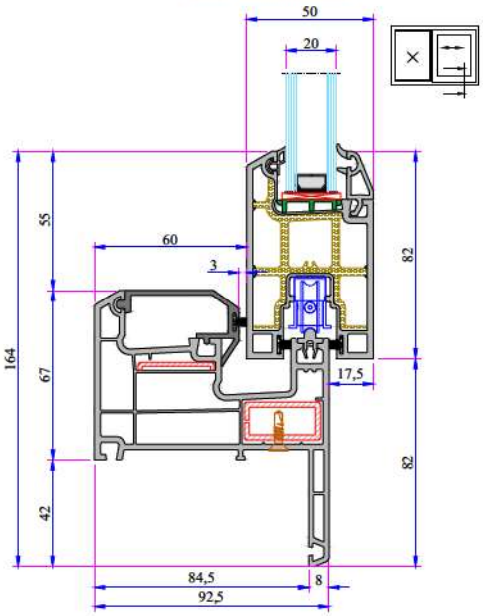

Frame Profile With Sill (Single Rail) - Sash Installation

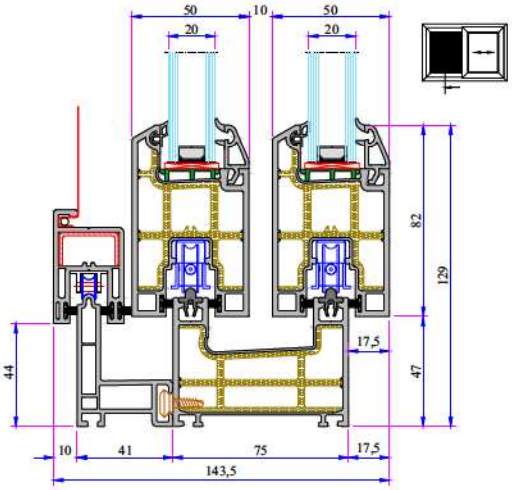

Double Rail Sliding Frame - Sliding Sash - Screen Adaptor Profile Installation

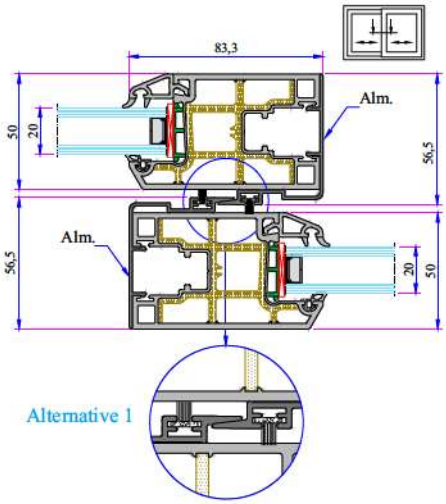

Alm. Sash Cover Profile Installation

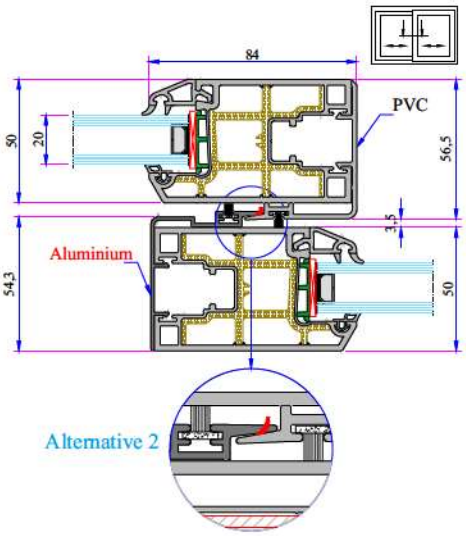

PVC and Aluminium Sash Cover Installation

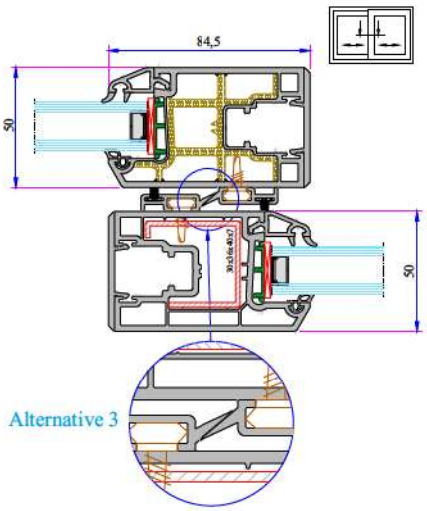

Sash Cover and Lap Strip Profile Installation

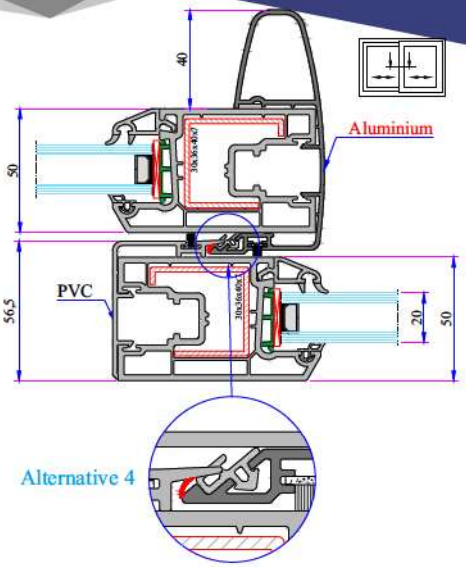

Alm. Sash Cover Griyaj Profile Installation

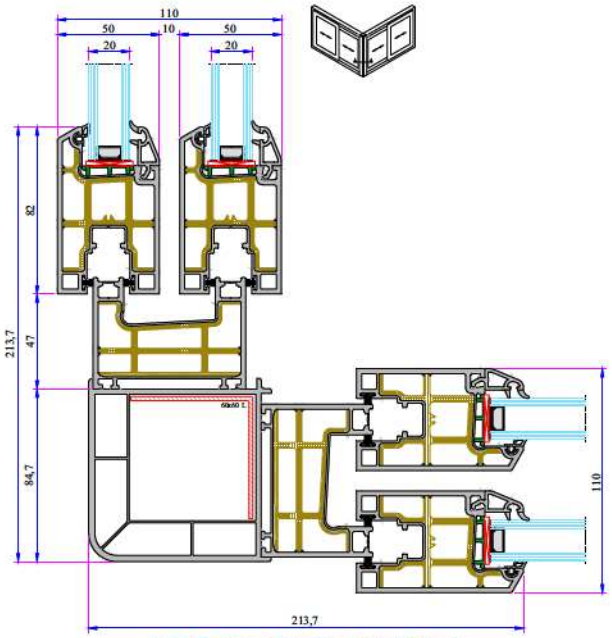

90° Corner Profile Installation

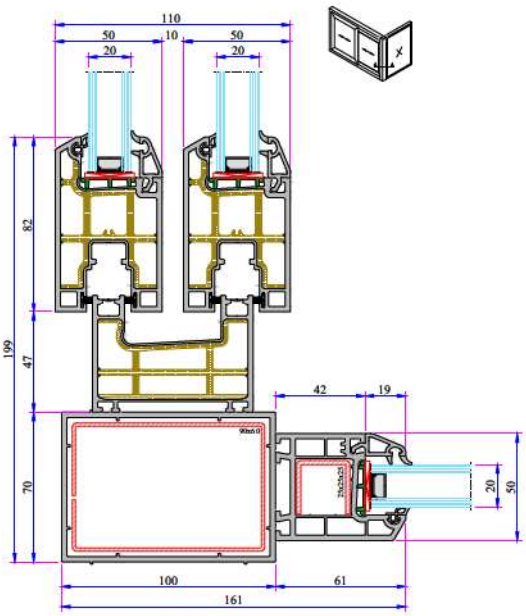

Box Profile Installation (70*100)

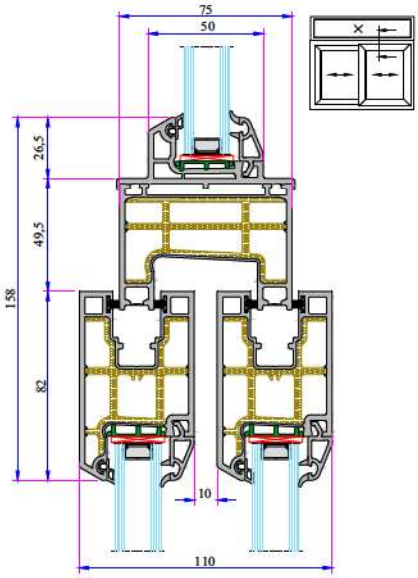

Top Fixed - Bottom Double Rail Sliding Installation

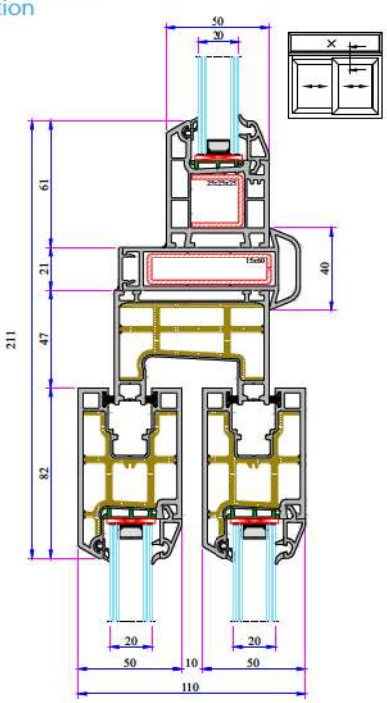

Large Coupling Profile Installation

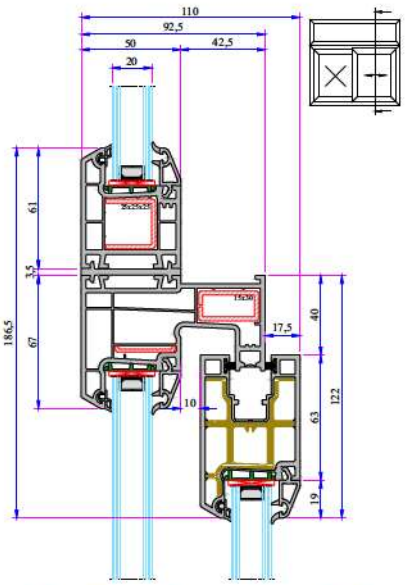

Top Fixed - Bottom Single Rail Sliding Installation

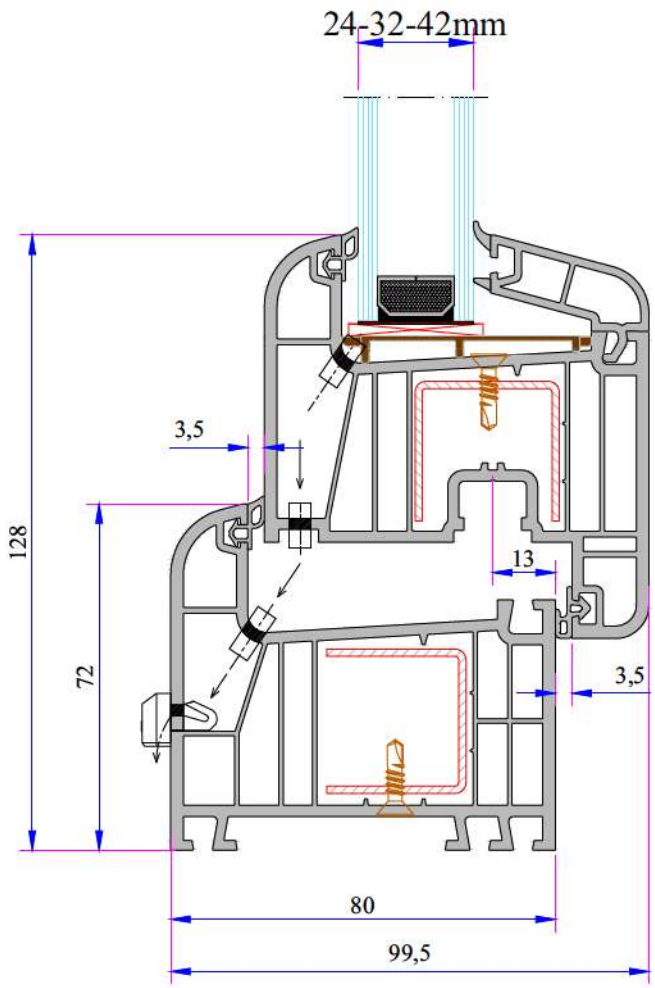

TECHNICAL

W 800 SERIES

Profile Width: 80 mm
Number of chambers: 6
Profile Class: A Class (TS EN 12608-1) / RAL 716-GZ A Class
Seal Type: External / Internal double seal system
Seal Type and Color: TPE – Grey /Black
Glass Thickness (mm): 24, 32, 42 mm
The thermal insulation Uf: 1,2 W/m²K

W 860 SERIES

Profile Width: 80 mm
Number of chamber: 6
Profile Class: B Class (TS EN 12608-1) / RAL 716-GZ B Class
Seal Type: External / Internal double seal system
Seal Type and Color: TPE – Grey / Black
Glass Thickness (mm): 24, 32, 42 mm
The thermal insulation Uf: 1,2 W/m²K

INSTRUCTION

· The profiles have 80 mm width.

· Because of the elastic grey and black seal which does not leave any stain on profiles will be provided maximum air, water, dust and sound isolation.

· Due to the 6 chambers profiles, it has maximum performance for thermal, sound and water isolation.

· It is a series of profiles with very special design that provides maximum wind resistance on high rise buildings.

· Excluding normal sash profile there is also chance to have a choice for offset type sash profile.

· In addition to white profile a different laminated color range is available.

· Application of 24, 32, 42 mm glazing beads give us alternatives of using double, triple glazing and panels.

W 800 - W 860 SERIES
PVC PROFILE SYSTEM

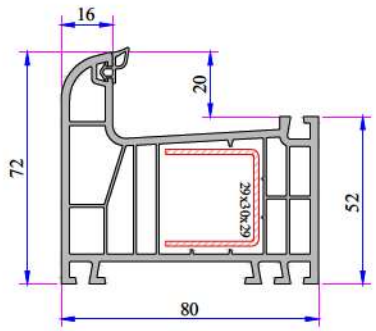

Frame Profile
800.1000 (A Class)
860.1000 (B Class)

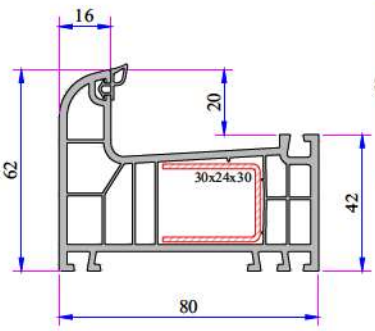

Eco Frame Profile
860.1003

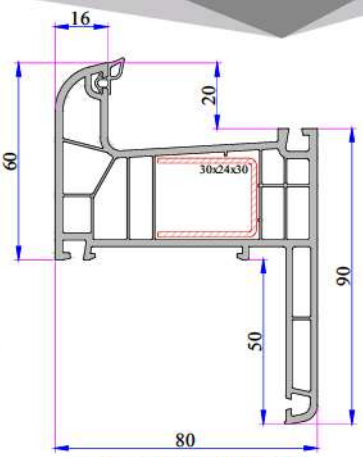

Frame Profile With Sill
860.1200
860.1200.PC (with Double Seal)

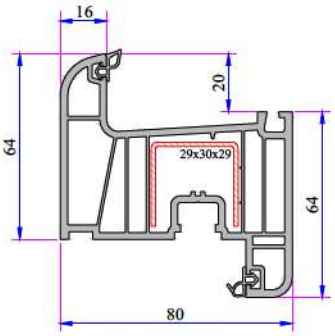

Sash Profile
800.2000 (A Class)
860.2000 (B Class)

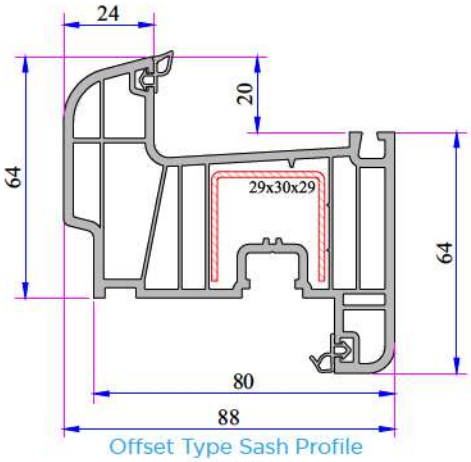

Offset Type Sash Profile
860.2200

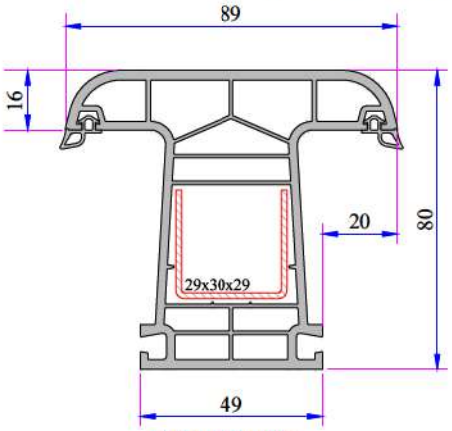

Mullion Profile
860.3000 (A Class)
860.3000 (B Class)

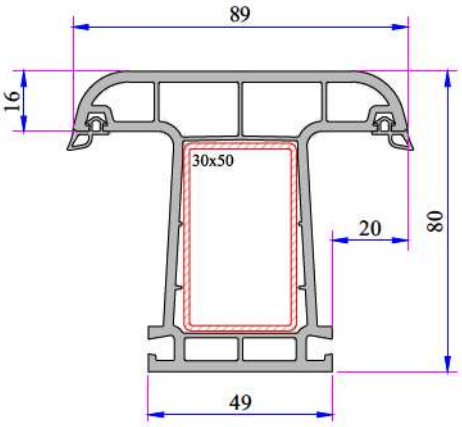

Static Mullion Profile
800.3009

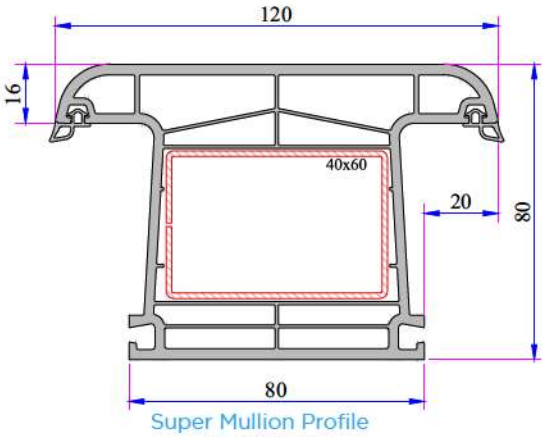

Super Mullion Profile
800.3008

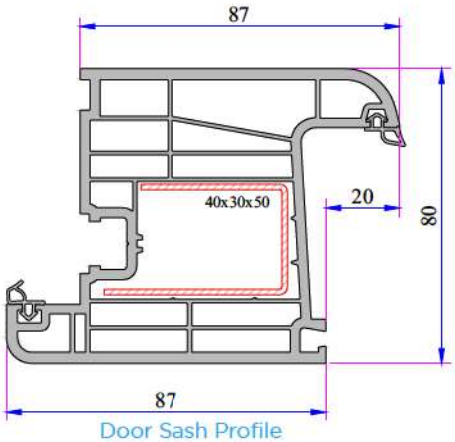

Door Sash Profile
800.2100

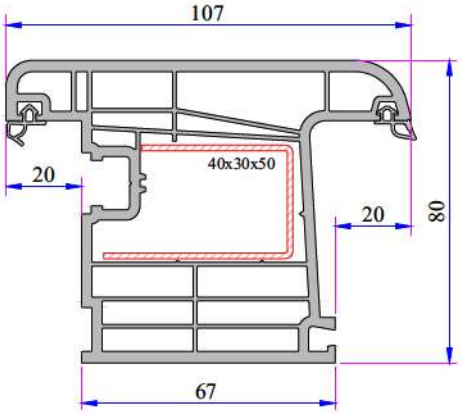

Outward Opening Door Sash Profile
800.2101

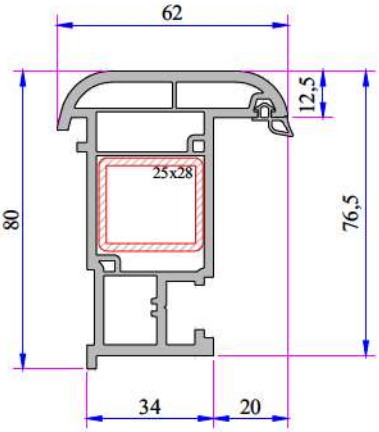

Lap Joint Profile
800.3100

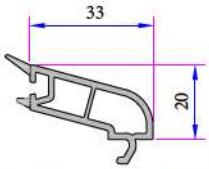

Double Glazing Bead 24 mm
800.4200

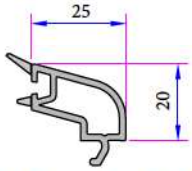

Triple Glazing Bead 32 mm
800.4500

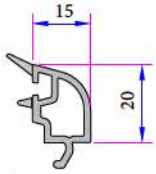

Triple Glazing Bead 42 mm
800.4600

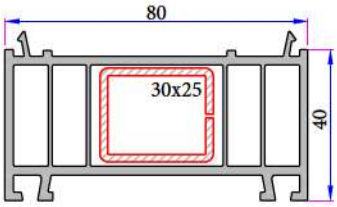

Frame Lifting Profile
080.5300

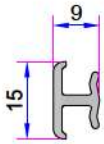

Universal Short Coupling Profile
099.5004

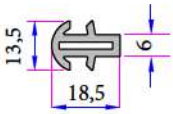

Coupling Profile
099.5003

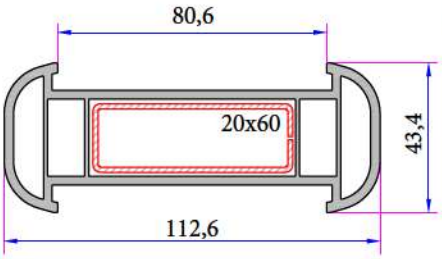

Large Coupling Profile
080.5000

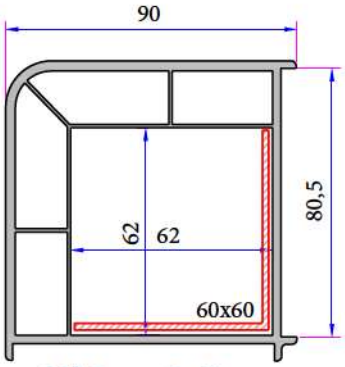

90° Corner Profile
080.5100

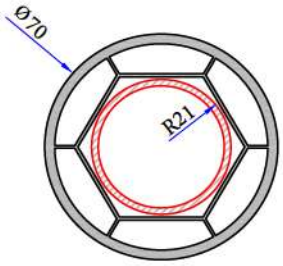

Pipe Profile
070.5106

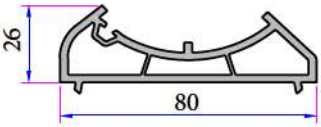

Angle Pipe Adaptor Profile
080.5104

W 800 - W 860 Re-Inforcement Profiles

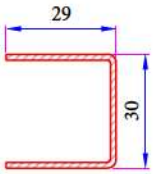

Lap Joint Profile
Reinforcement
34022-12002

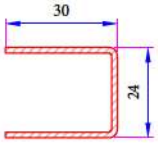

Eco Frame
Reinforcement
34022-12004

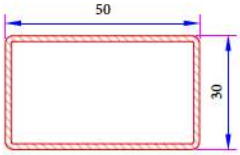

Static Mullion
Reinforcement
34022-12111

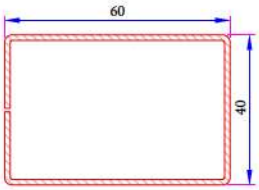

Super Mullion
Reinforcement
34022-12110

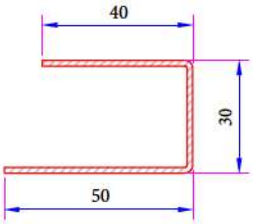

Door Sash - Outward
Opening Door Sash
Reinforcement
34022-12014

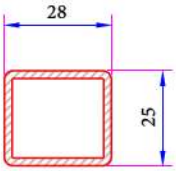

Lap Joint Frame
Lifting Profile Reinforcement
34022-12117

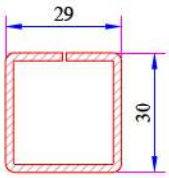

Mullion Profile Static
Reinforcement
34022-15129

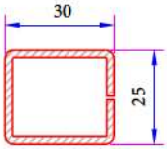

Frame Lifting Profile
Reinforcement
34022-12119

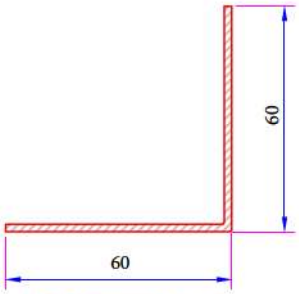

90° Corner Profile
Reinforcement
34022-12306

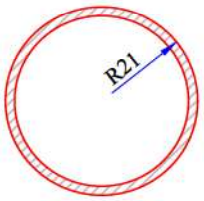

Pipe Profile
Reinforcement
34022-12502

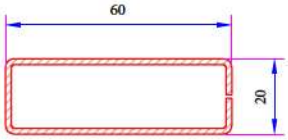

Large Coupling Profile
Reinforcement
34022-12106

W 800 - W 860 Installation

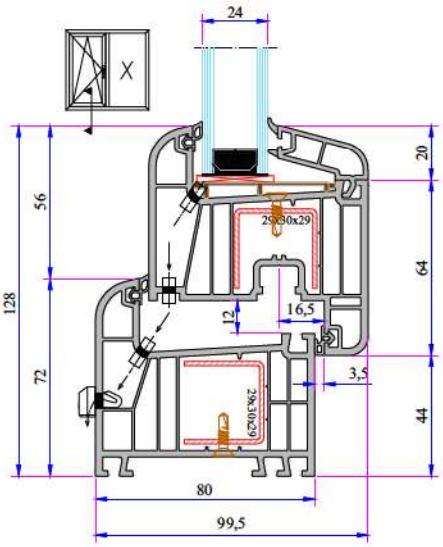

Frame Sash Installation

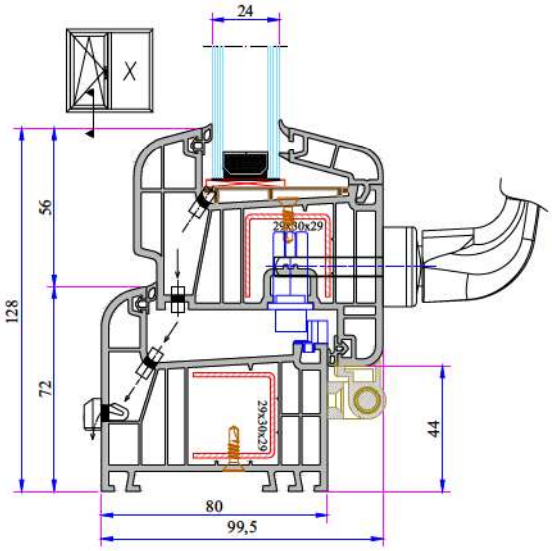

Frame - Offset Type Sash
Installation

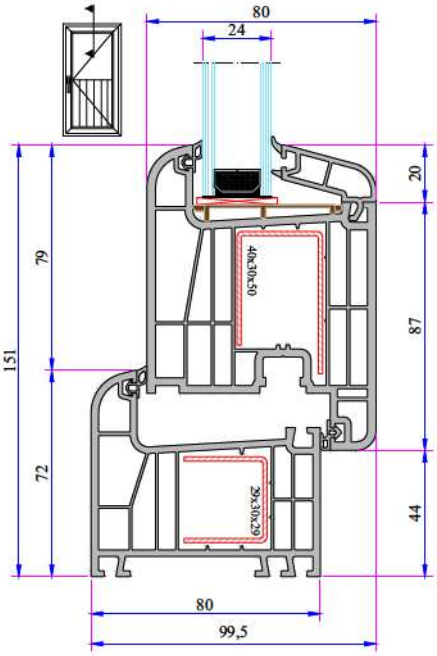

Frame - Door Sash Installation

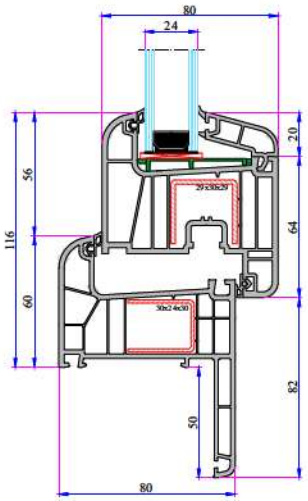

Frame Profile with Sill - Sash Installation

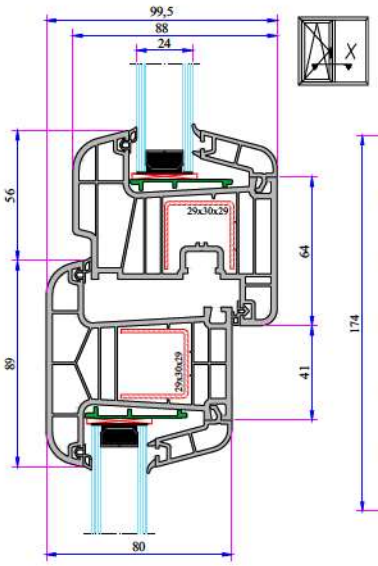

Sash - Mullion Profile Installation

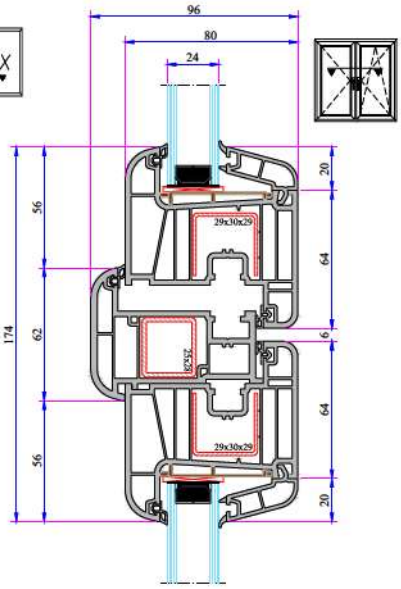

Sash - Lap Joint Installation

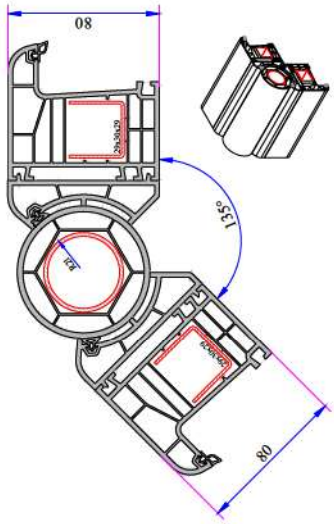

Pipe Profile Installation

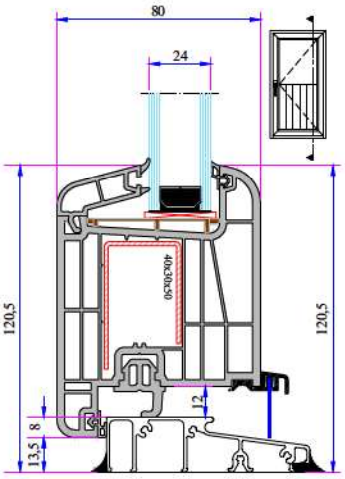

With Aluminium Threshold - Door Sash Installation

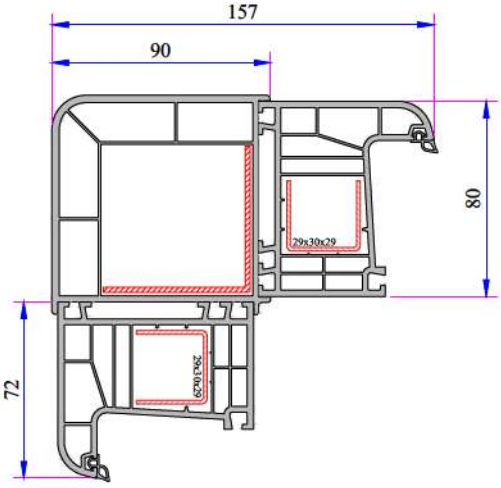

90° Corner Profile Installation

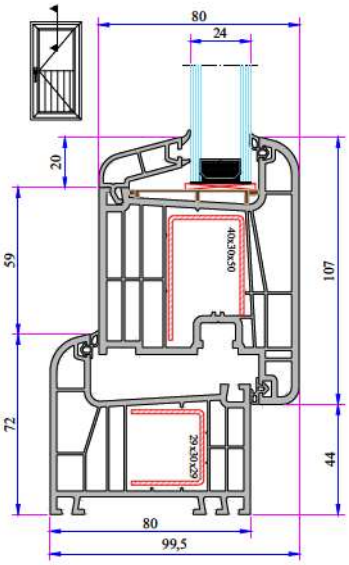

Frame - Outward Opening Door Sash Installation

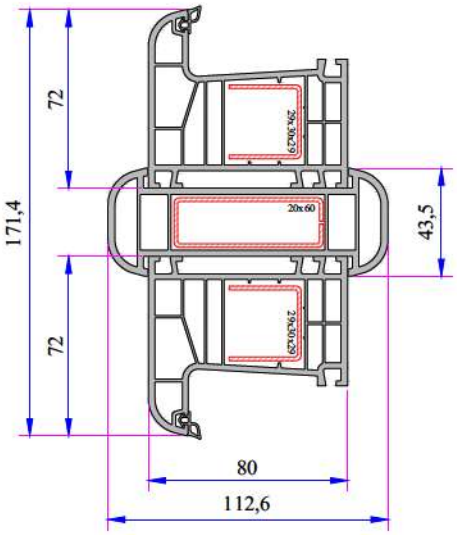

Large Coupling Installation

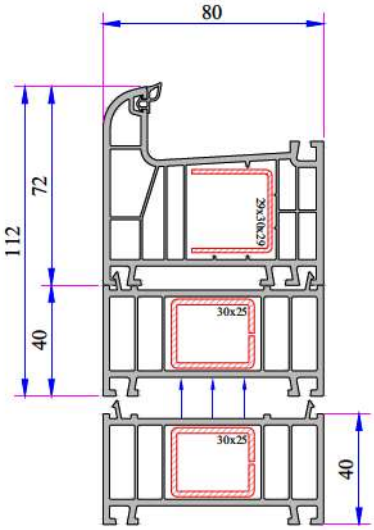

Frame Lifting Installation

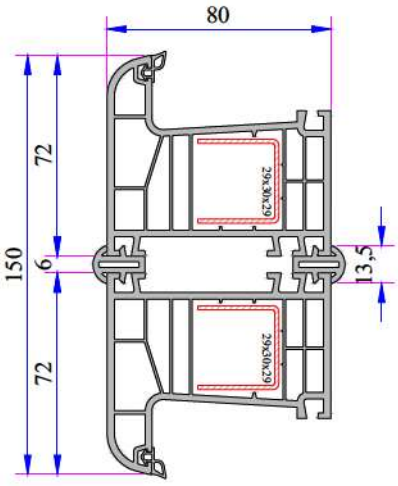

Short Coupling Installation

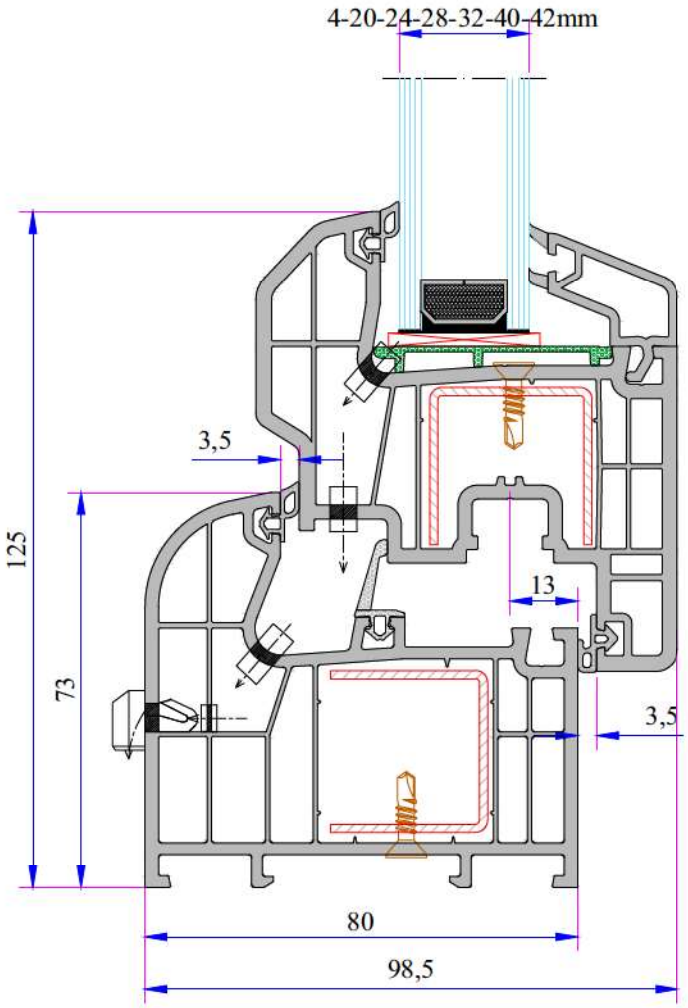

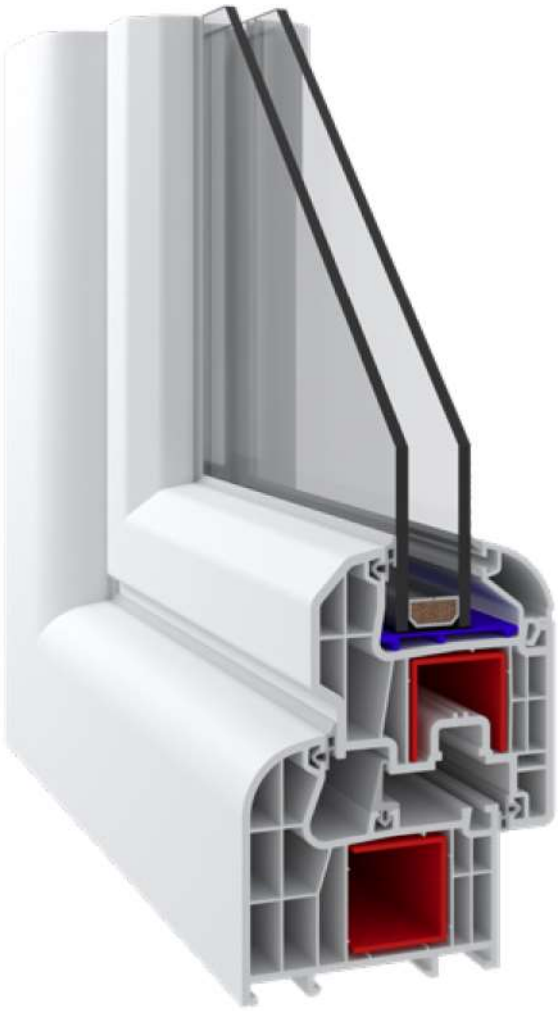

TECHNICAL

W 873 MD SERIES

Profile Width: 80 mm

Number of chambers: 6

Profile Class: B Class (TS EN 12608-1)

Seal Type: External / Internal triple seal system

Seal Type and Color: TPE – Grey /Black

Glass Thickness (mm): 4, 20, 24, 28, 32, 40, 42 mm

The thermal insulation Uf: 1,15 W/m²K

INSTRUCTION

· The profiles have frame 80 mm, sash 70 mm width.

· Because of the elastic grey and black seal which does not leave any stain on profiles will be provided maximum air, water, dust and sound isolation.

· Due to the 6 chambers profiles, it has maximum performance for thermal, sound and water isolation.

· It is a series of profiles with very special design that provides maximum wind resistance on high rise buildings.

· In addition to white profile a different laminated color range is available.

· 4-5 mm single glazing, application of 20, 24, 32, 42 mm glazing beads give us alternatives of using double, triple glazing and panels.

W 873 MD SERIES
PVC PROFILE SYSTEM

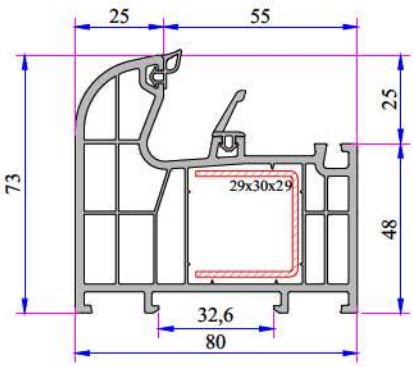

Frame Profile
873.1000

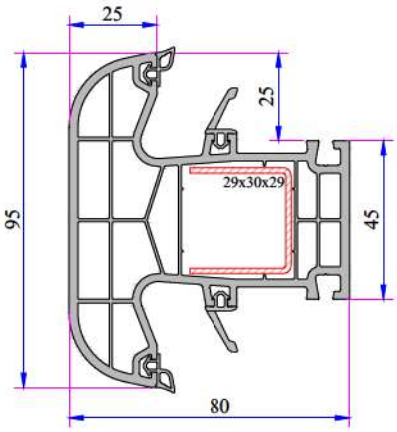

Mullion Profile
873.3000

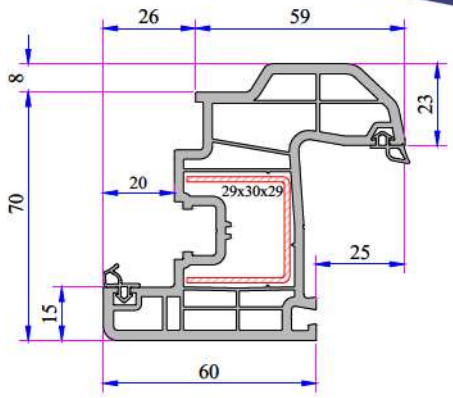

Offset Type Sash Profile
777.2000

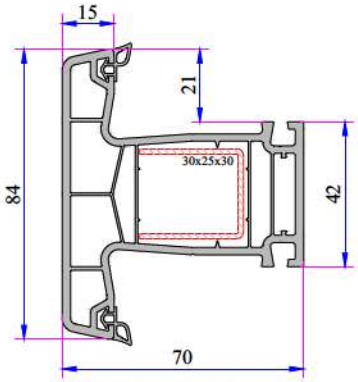

Mullion Profile For Door
750.3000

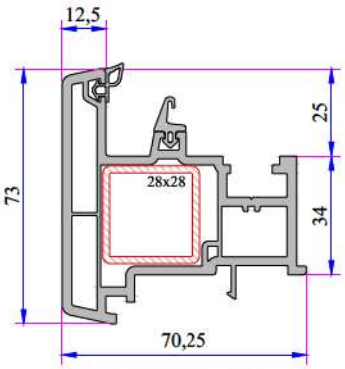

Lap Joint Profile
777.3100

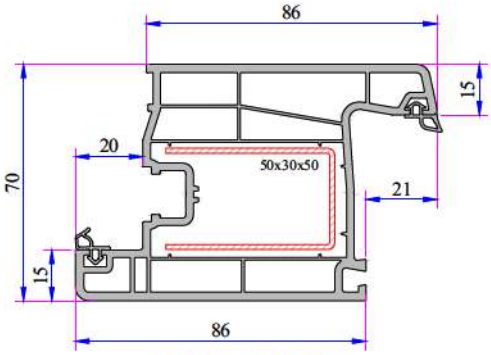

Door Sash Profile
750.2100

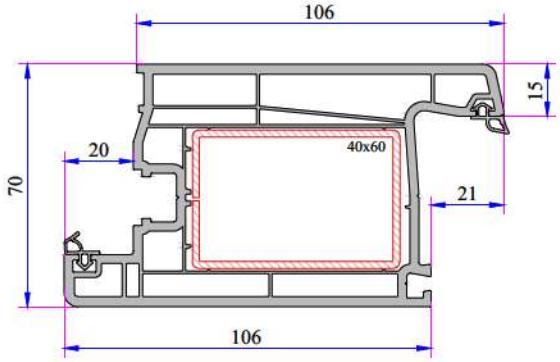

Super Door Sash Profile
750.2103

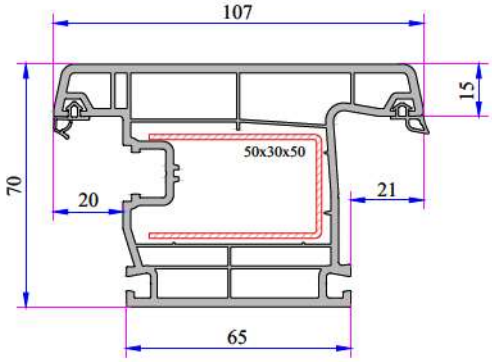

Outward Opening Door Sash Profile
750.2101

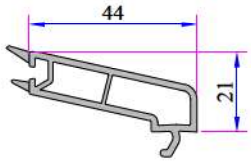

Single Glazing Bead 4-6 mm
P.A750.4000

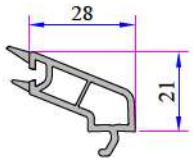

Double Glazing Bead 20 mm
750.4100

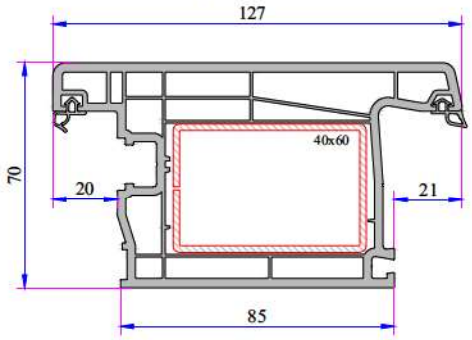

Outward Opening Super Door Sash Profile
752.2104

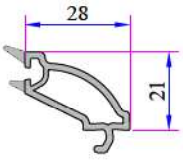

Dec. Double Glazing
Bead 20 mm
750.4102

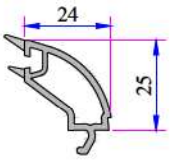

Double Glazing
Bead 24 mm
777.4204

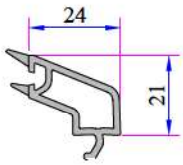

Double Glazing
Bead 24 mm
750.4200

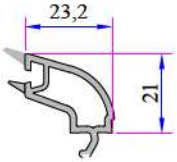

Double Glazing
Bead 24 mm
750.4204

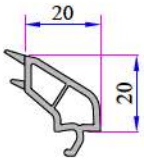

Double Glazing
Bead 28 mm
101.4100

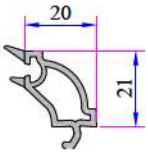

Dec. Double Glazing
Bead 28 mm
101.4102

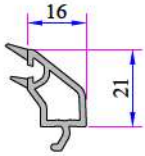

Triple Glazing
Bead 32 mm
750.4500

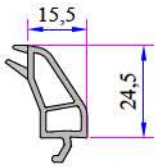

Triple Glazing Bead 32 mm
433.4200

** 873 series Frame and Mullion Profile Glazing Bead dimensions is different. For frame and Muliion Profile Glass size check page 170.

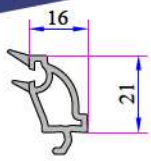

Dec. Triple Bead 32 mm
101.4202

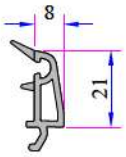

Triple Glazing Bead 40 mm
101.4500

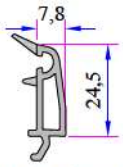

Triple Glazing Bead 40 mm
433.4500

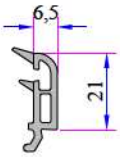

Triple Glazing Bead 42 mm
532.4500

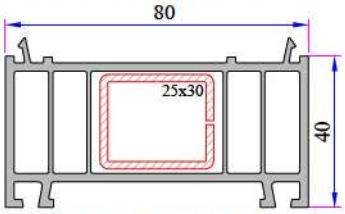

Frame Lifting Profile
080.5300

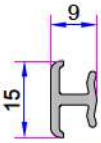

Universal Short Coupling Profile
099.5004

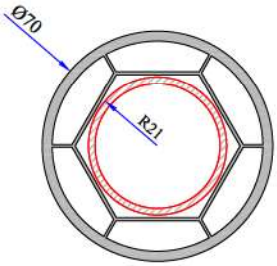

Pipe Profile
070.5106

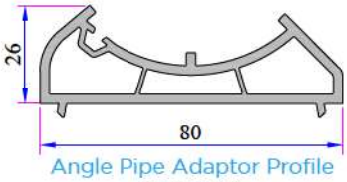

Angle Pipe Adaptor Profile
080.5104

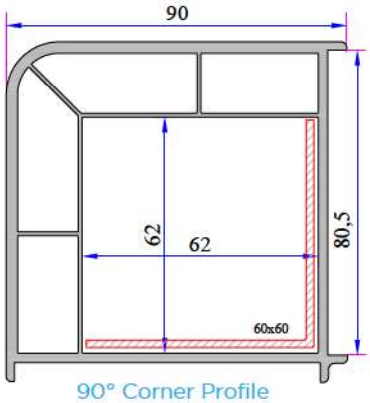

90° Corner Profile
080.5100

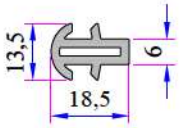

Coupling Profile
099.5003

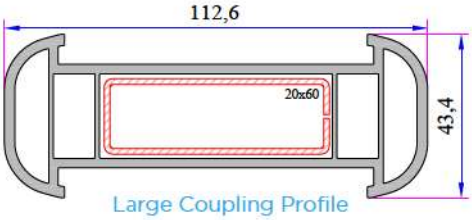

Large Coupling Profile
080.5000

W 873 MD Re-Inforcement Profiles

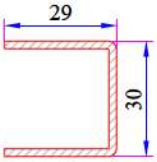

Frame, Sash, Mullion Profile Reinforcement
34022-12002

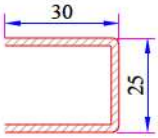

Mullion Profile For Door Reinforcement
34022-12004

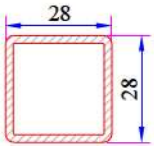

Lap Joint Profile Reinforcement
34022-12113

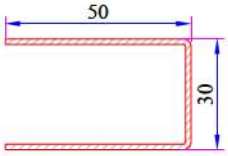

Door Sash - Outward Opening Door Sash Profile Reinforcement
34022-12013

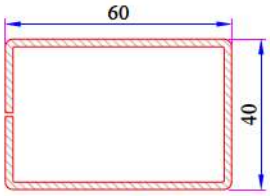

Super Door Sash - Super Outward Opening Door Sash Profile Reinforcement
34022-12110

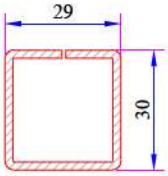

Mullion Profile Static Reinforcement
34022-15129

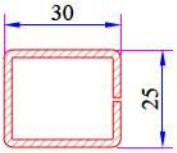

Frame Lifting Profile Reinforcement
34022-12119

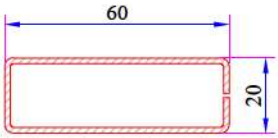

Large Coupling Profile Reinforcement
34022-12106

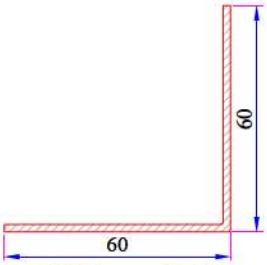

90° Corner Profile Reinforcement
34022-12306

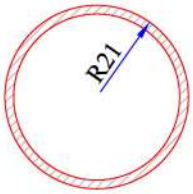

Pipe Profile Reinforcement
34022-12502

W 873 MD Installation

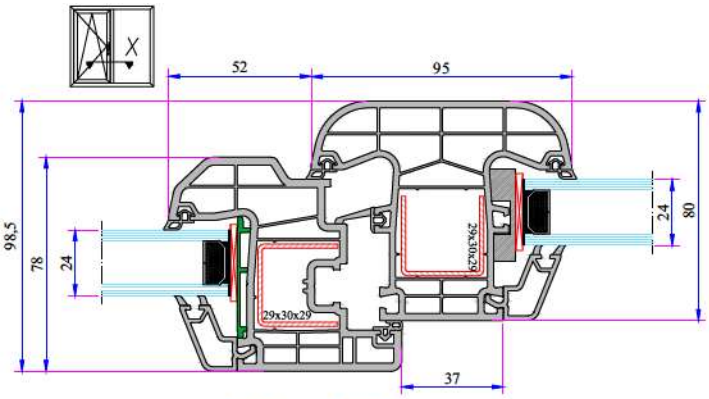

Mullion - Offset type sash Installation

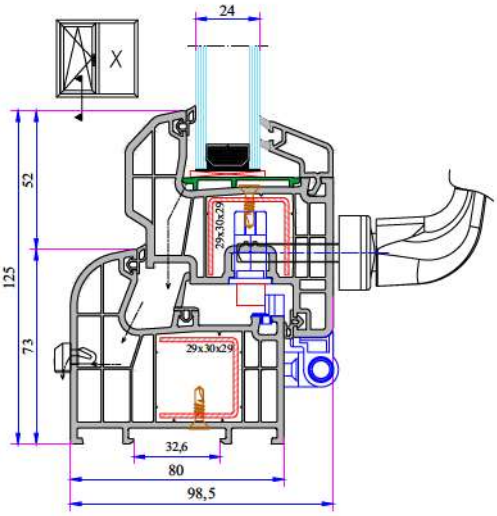

Frame-Sash Installation

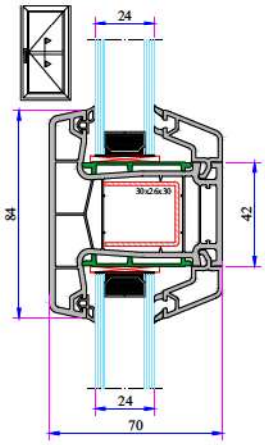

Door Sash- Mullion Installation

W 873 MD SERIES
PVC PROFILE SYSTEM

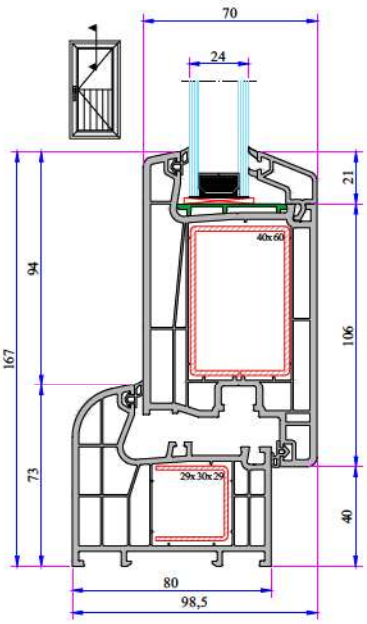

Frame - Super Door Sash Installation

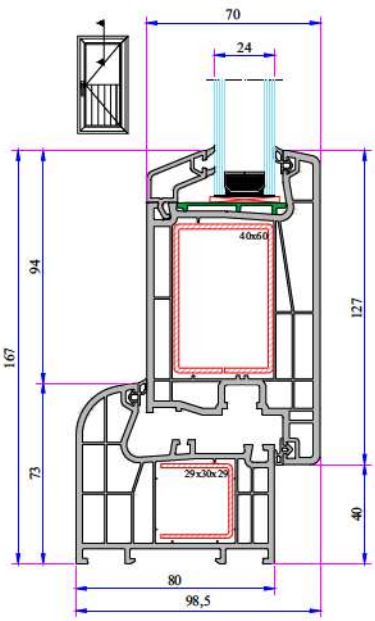

Frame – Super Outward Opening Door Sash Installation

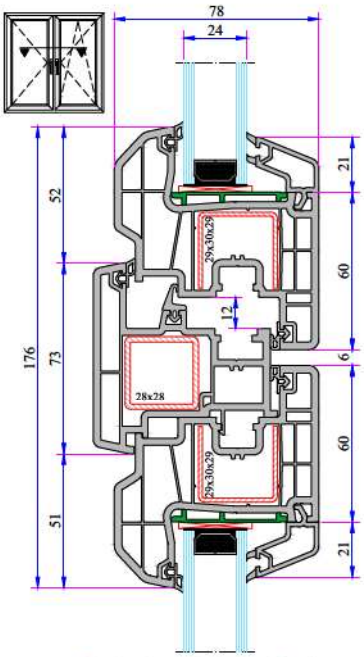

Sash -Lap Joint – Sash Installation

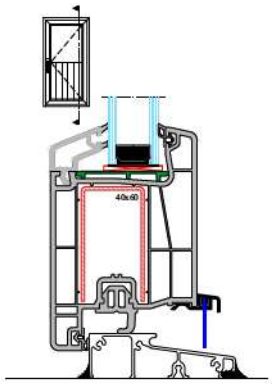

With Aluminium Threshold - Door Sash Installation

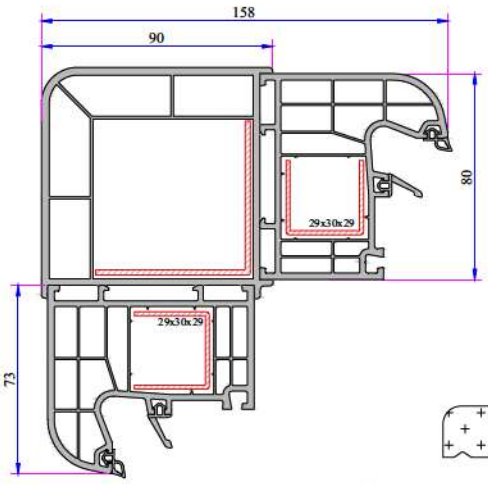

90° Corner Profile Installation

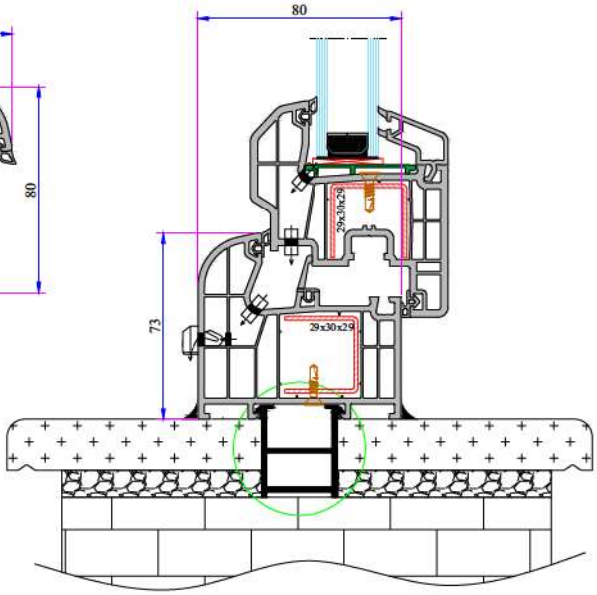

Frame Profile Installation

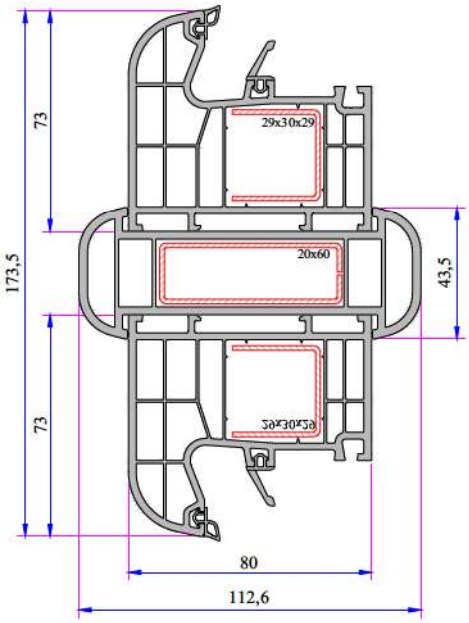

Large Coupling Profile Installation

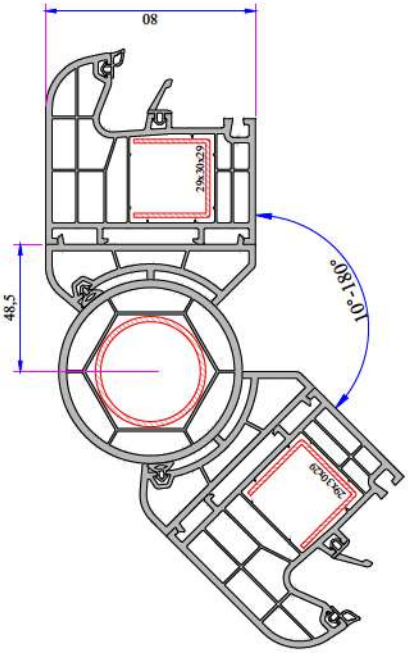

Pipe Profile Installation

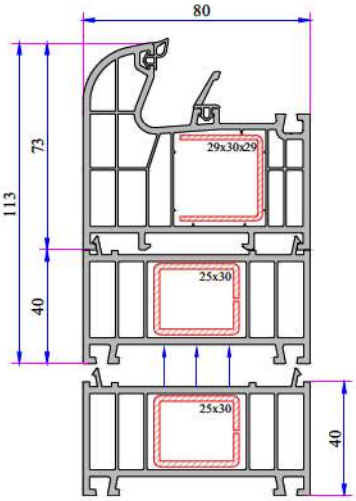

Frame Lifting Profile Installation

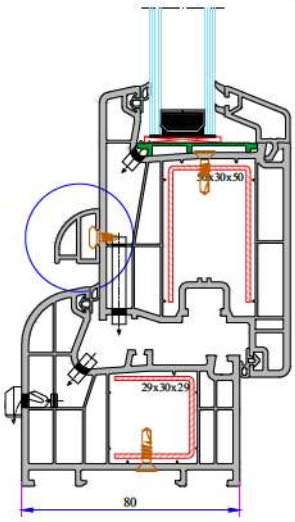

Offset Profile Installation

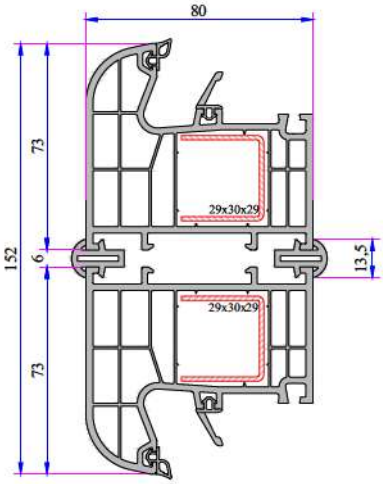

Short Coupling Profile

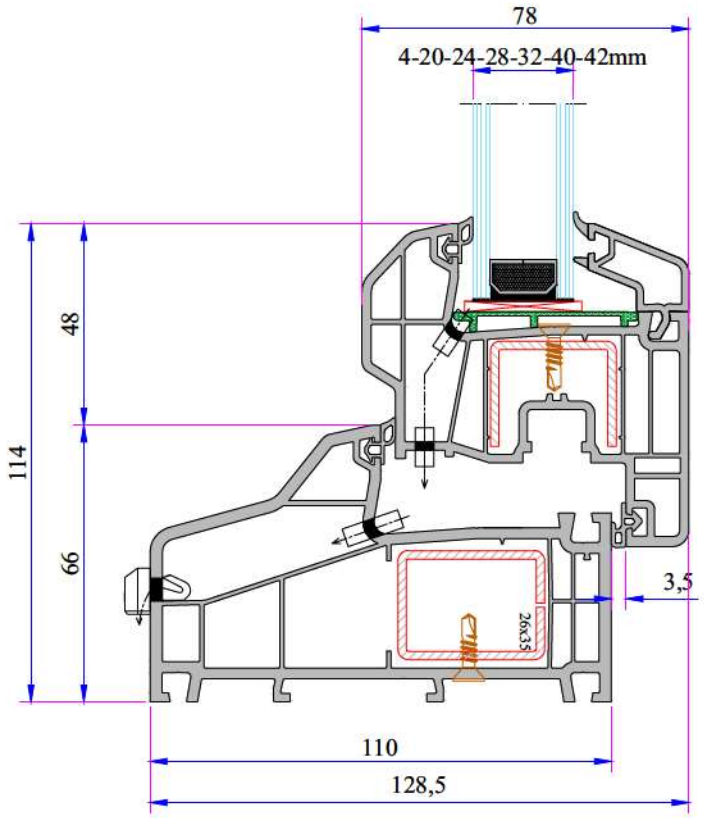

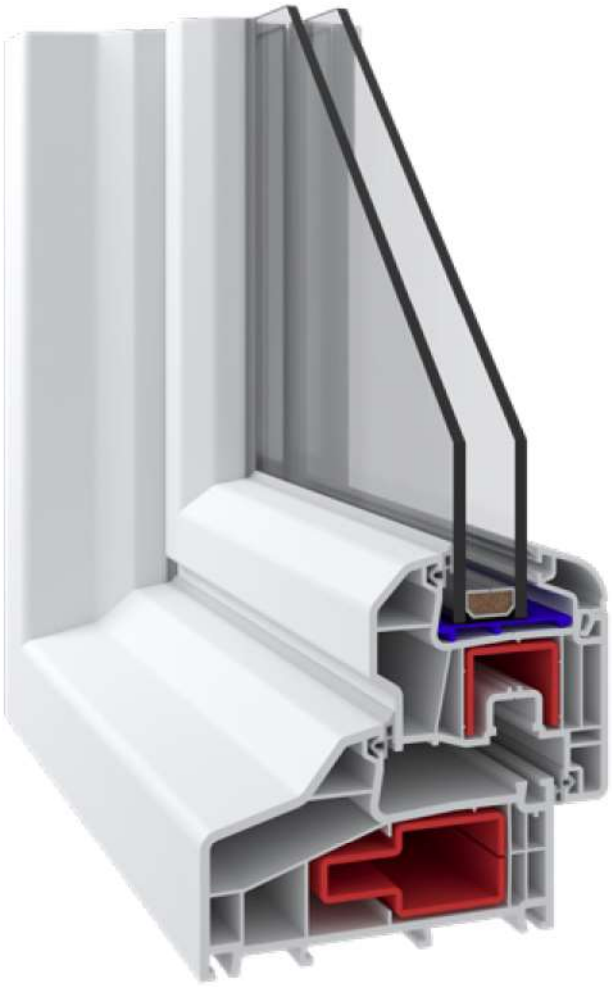

TECHNICAL

W 790 SERIES

Profile Width: 110 mm

Number of chambers: 5

Profile Class: A Class (TS EN 12608-1) / RAL 716-GZ A Class

Seal Type: External / Internal double seal system

Seal Type and Color: TPE – Grey /Black

Glass Thickness (mm): 4, 20, 24, 28, 32, 40, 42 mm

The thermal insulation Uf: 1,36 W/m²K

INSTRUCTION

· The main profiles have 110 mm width.

· Because of the elastic grey and black seal which does not leave any stain on profiles will be provided maximum air, water, dust and sound isolation.

· Due to the 5 chambers profiles, it has maximum performance for thermal, sound and water isolation.

· It is a series of profiles with very special design that provides maximum wind resistance on high rise buildings.

· In addition to main white profile it has a different laminated color range.

· 4-5 mm single glazing application of 4, 20, 24, 28, 32, 40, 42 mm glazing beads give us alternatives of using double, triple glazing and panels.

W 790 SERIES
PVC PROFILE SYSTEM

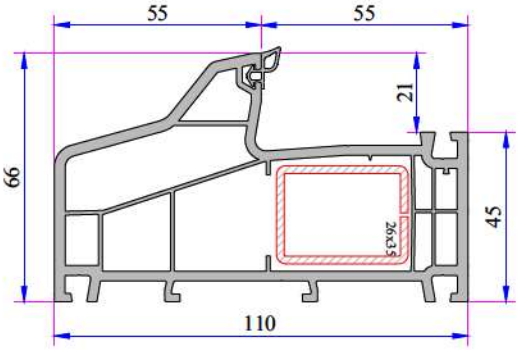

W 790 Frame Profile
790.1000

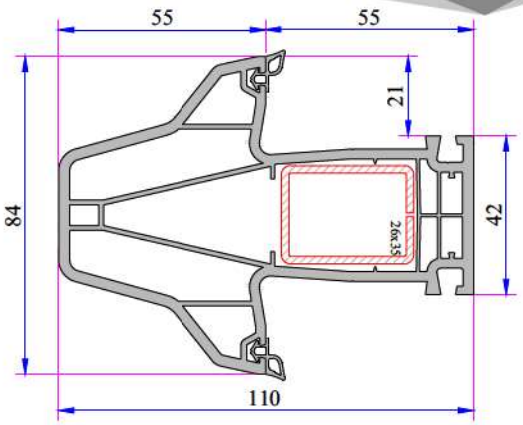

W 790 Mullion Profile
790.3000

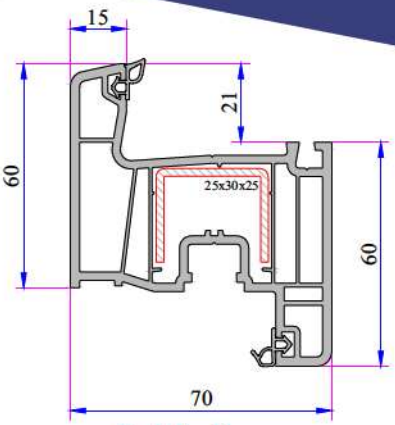

Sash Profile
750.2000

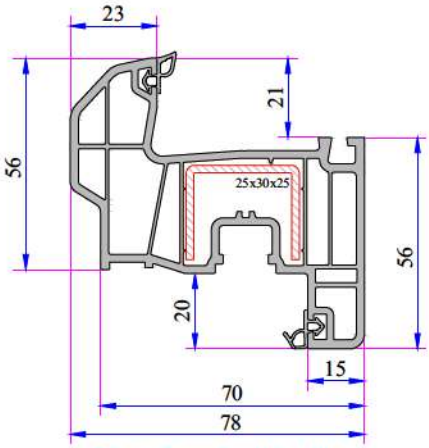

Offset Type Sash Profile
(6 Chambers)
750.2205

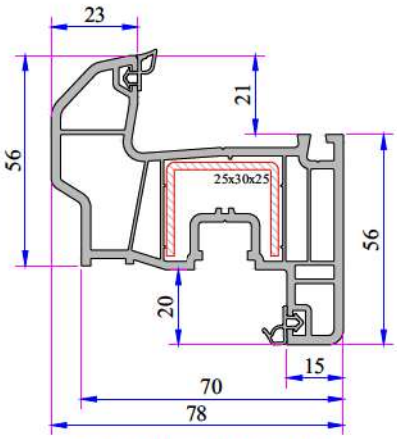

Offset Type Sash Profile
750.2200

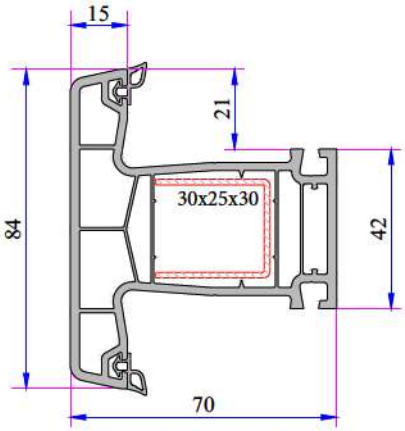

Mullion For Door Profile
750.3000

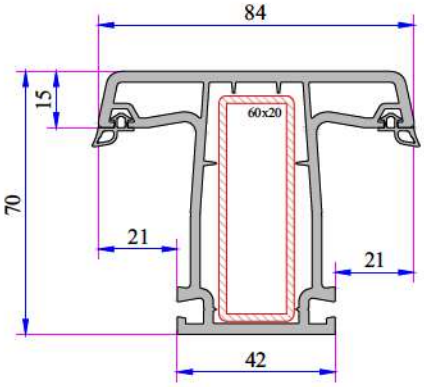

Static Mullion Profile
750.3009

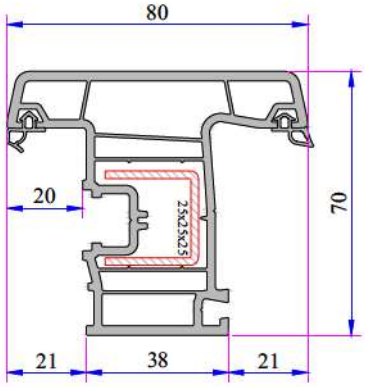

Outward Opening Sash Profile
750.2001

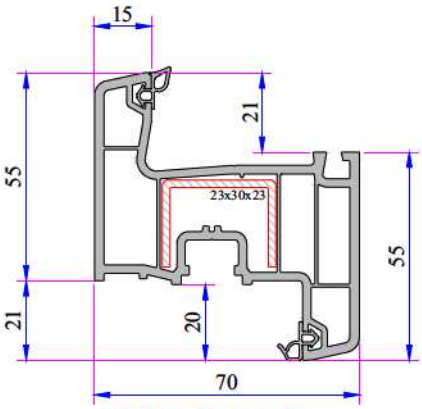

24 Axis. Sash Profile
750.2003

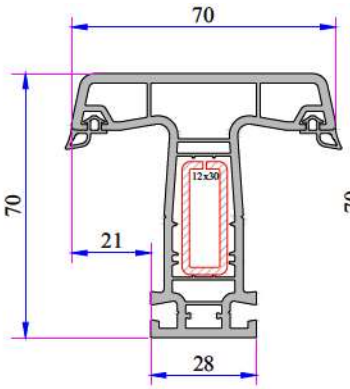

Eco Mullion Profile
750.3006

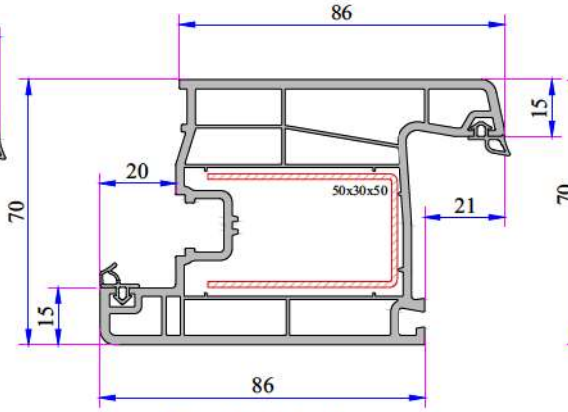

Door Sash Profile
750.2100

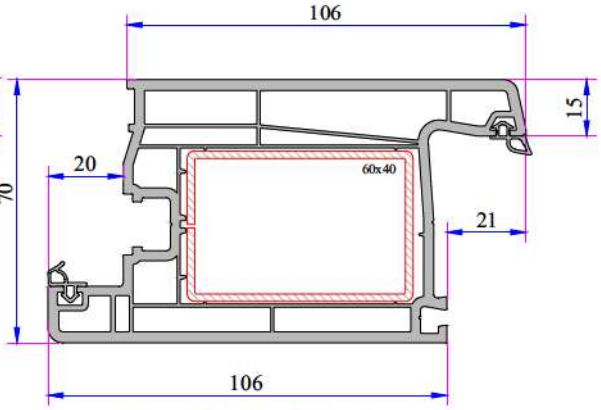

Super Door Sash Profile
750.2103

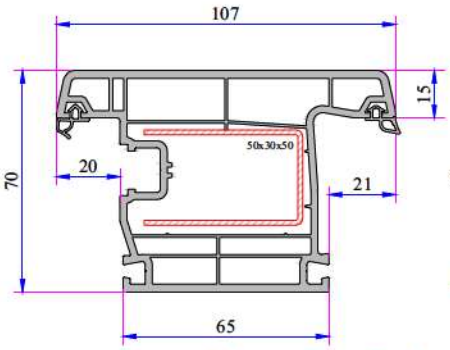

Outward Opening Door Sash Profile
750.2101

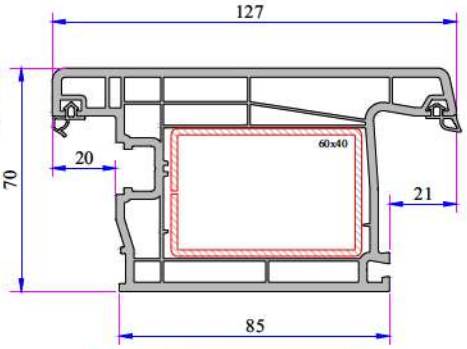

Outward Opening Super Door Sash Profile
752.2104

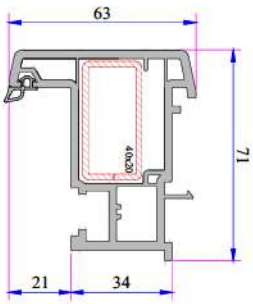

Static Lap Joint Profile (Spiked)
750.3101

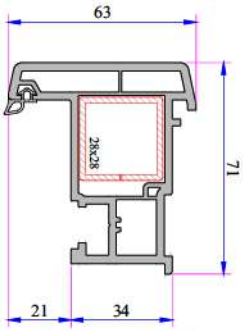

Lap Joint Profile
750.3100

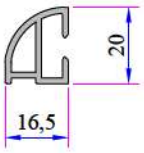

Offset Profile
900.6307

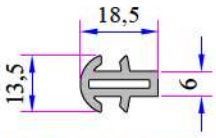

Short Coupling Profile
099.5003

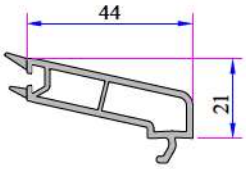

Single Glazing Bead 4-6mm
750.4000

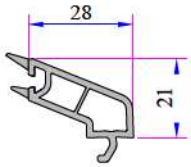

Double Glazing Bead 20 mm
750.4100

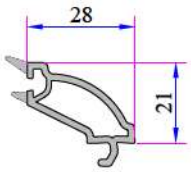

Double Glazing Bead 20 mm
750.4102

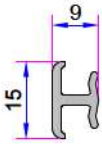

Universal Short Coupling Profile
099.5004

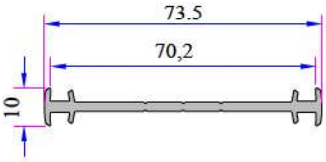

Narrow Coupling Profile
070.5001

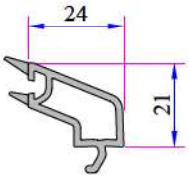

Double Glazing Bead 24 mm
750.4200

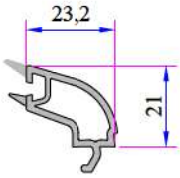

Double Glazing Bead 24 mm
750.4204

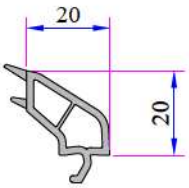

Double Glazing Bead 28 mm
101.4100

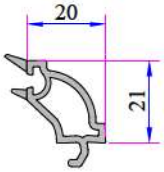

Dec. Double Glazing Bead 28 mm
101.4102

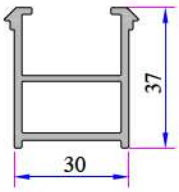

Frame Montage Profile
060.5301

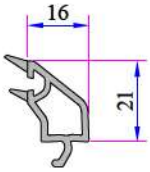

Triple Glazing Bead 32 mm
750.4500

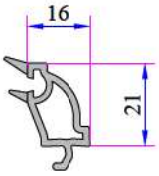

Triple Glazing Bead 32 mm
101.4202

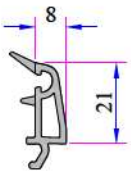

Triple Glazing Bead 40 mm
101.4500

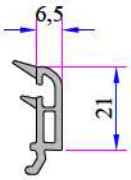

Triple Glazing Bead 42 mm
532.4500

W 790 Re-Inforcement Profiles

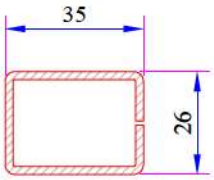

Frame - Mullion Profile Reinforcement
34022-12116

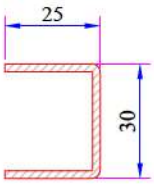

Sash – Offset Type Sash Profile Reinforcement
34022-12025

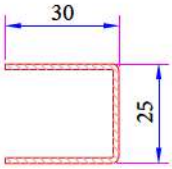

Mullion For Door Profile Reinforcement
34022-12004

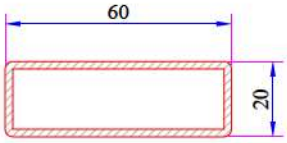

Static Mullion Profile Reinforcement
34022-12106

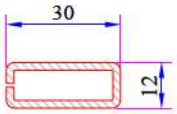

Eco Mullion Profile Reinforcement
34022-12115

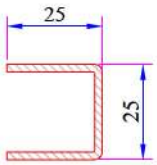

Outward Opening Sash Profile Reinforcement
34022-12003

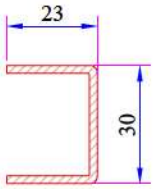

24 Axis. Sash Profile Reinforcement
34022-12030

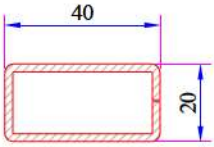

Static Lap Joint Profile Reinforcement
34022-12114

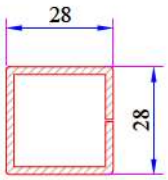

Lap Joint Profile Reinforcement
34022-12113

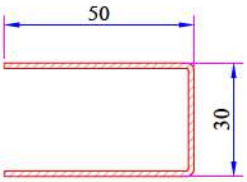

Door Sash - Outward Opening Door Sash Reinforcement
34022-12013

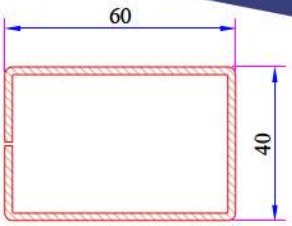

Super Door Sash - Outward Opening Super Door Sash Reinforcement
34022-12110

W 790 Installation

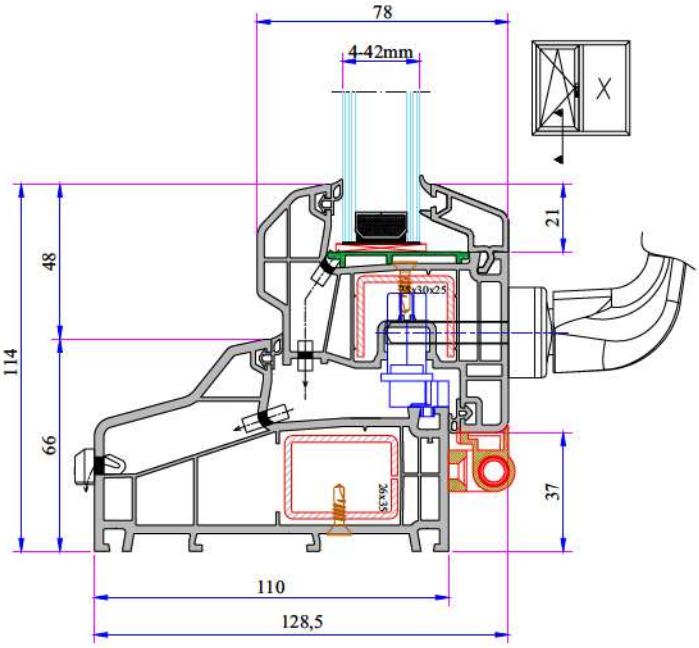

Frame - Sash Installation

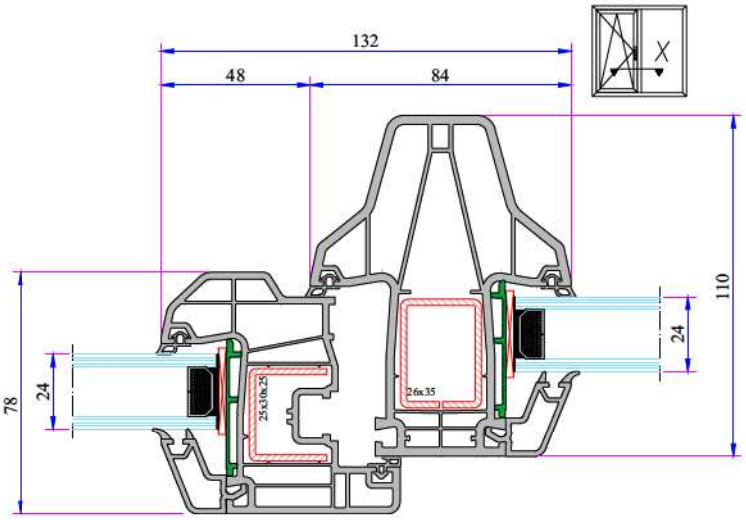

Mullion - Offset Type Sash Installation

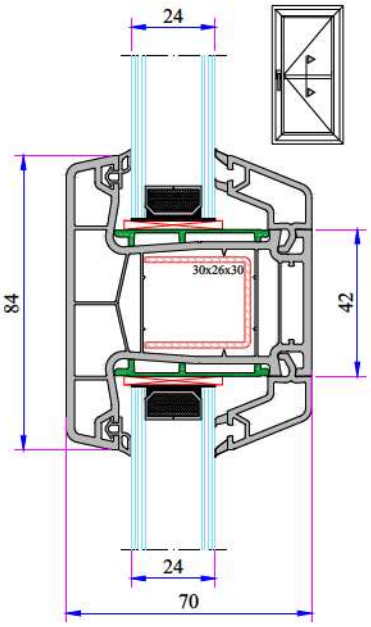

Mullion For Door Profile Installation

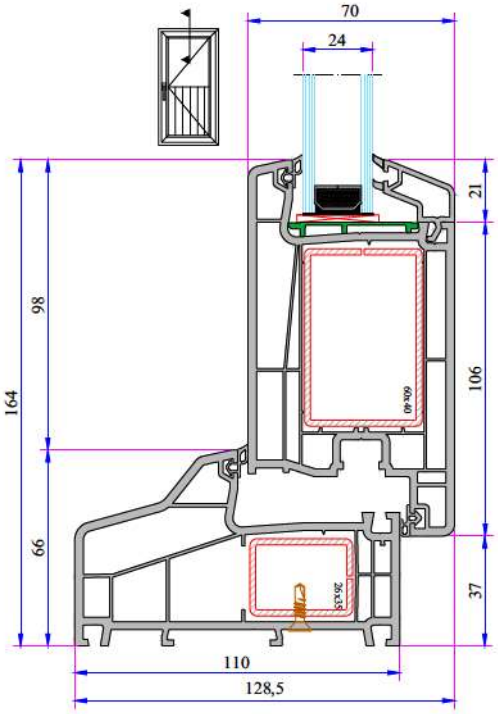

Frame - Super Door Sash Installation

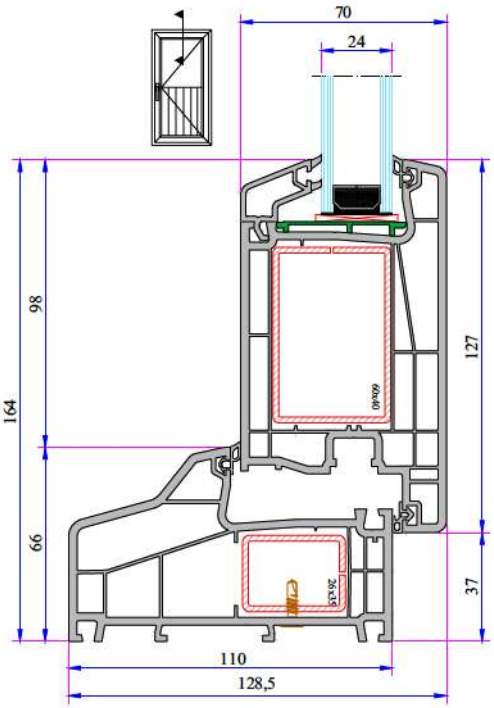

Frame - Outward Opening Super Door Sash Installation

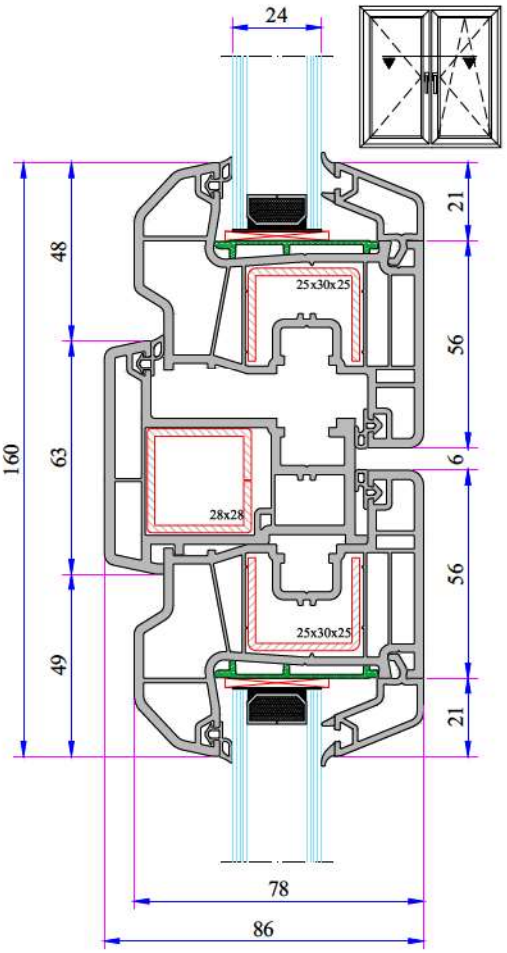

Sash Lap Joint And Sash Installation

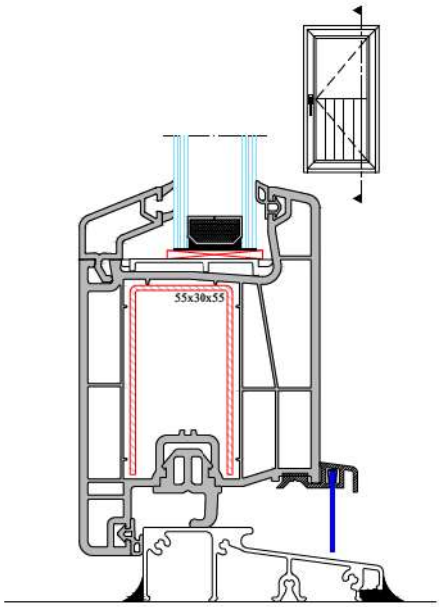

With Aluminium Threshold Frame Door Sash Installation

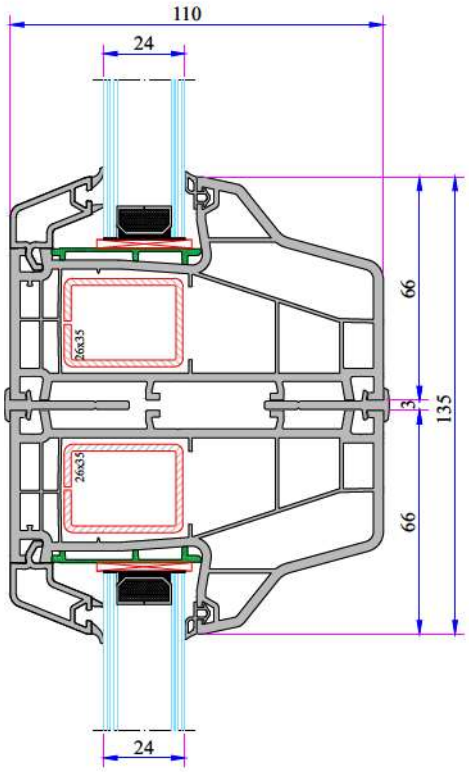

Narrow Coupling Profile Installation

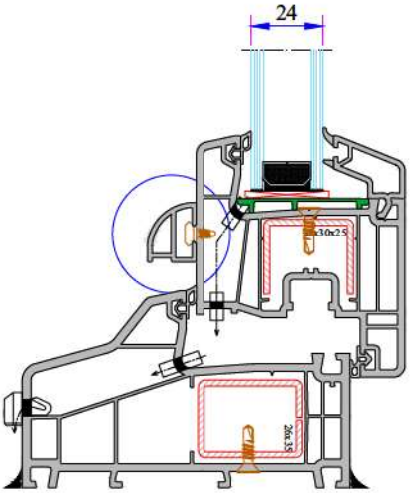

Offset Profile Installation

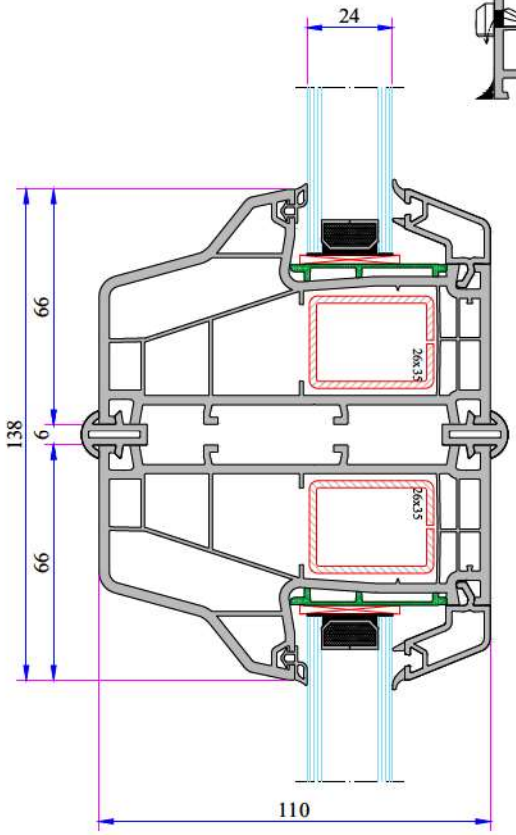

Short Coupling Profile Installation

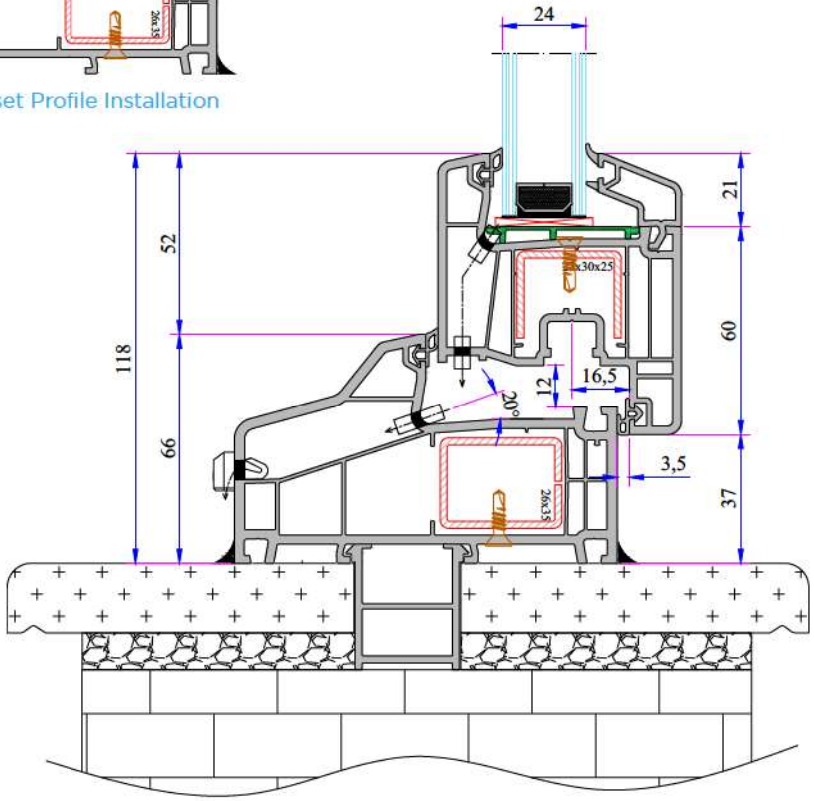

Frame Montage Profile Installation

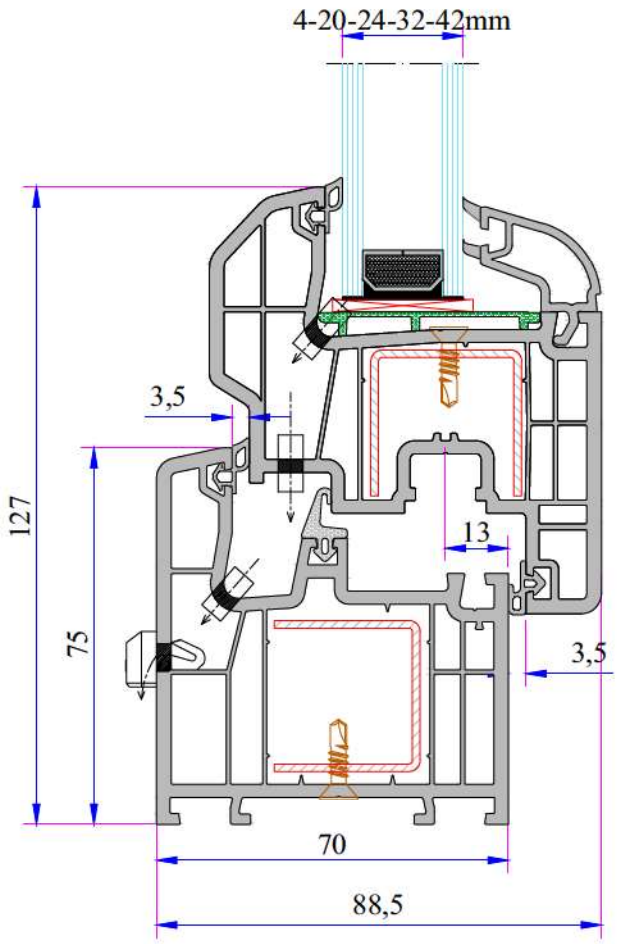

TECHNICAL

W 777 MD & AD SERIES

Profile Width: 70 mm

Number of chambers: 5

Profile Class: A Class (TS EN 12608-1)

Seal Type: External / Internal triple seal system

Seal Type and Color: TPE – Grey /Black

Glass Thickness (mm): 4, 20, 24, 28, 32, 40, 42 mm

The thermal insulation Uf: 1,22 W/m²K

INSTRUCTION

· The main profiles have 70 mm width.

· Because of the elastic grey and black seal which does not leave any stain on profiles will be provided maximum air, water, dust and sound isolation.

· Due to the 5 chambers profiles, it has maximum performance for thermal, sound and water isolation.

· It is a series of profiles with very special design that provides maximum wind resistance on high rise buildings.

· In addition to white profile a different laminated color range is available.

· 4-5 mm single glazing application of 20, 24, 28, 32, 40, 42 mm glazing beads give us alternatives of using double, triple glazing and panels.

W 777 MD & AD SERIES
PVC PROFILE SYSTEM

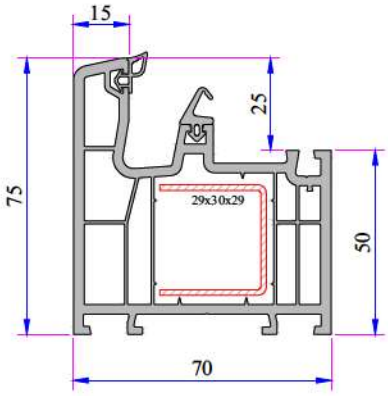

Frame Profile
777.1000

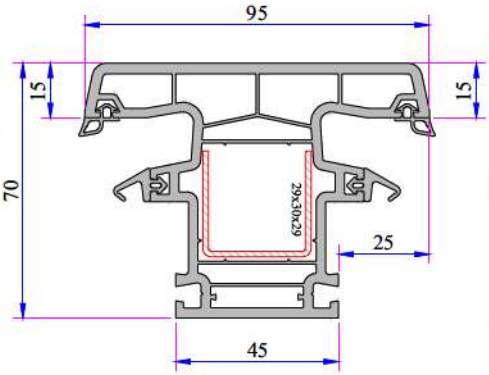

Mullion Profile
777.3000

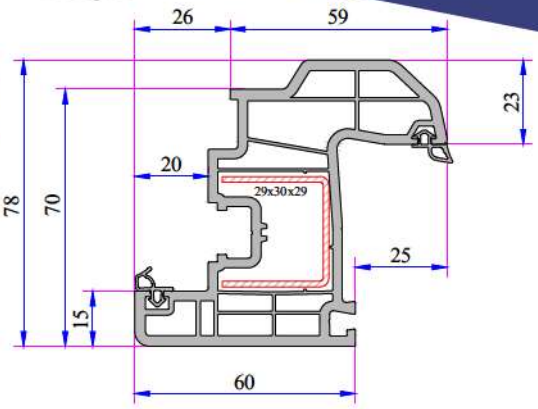

Offset Type Sash Profile
777.2000

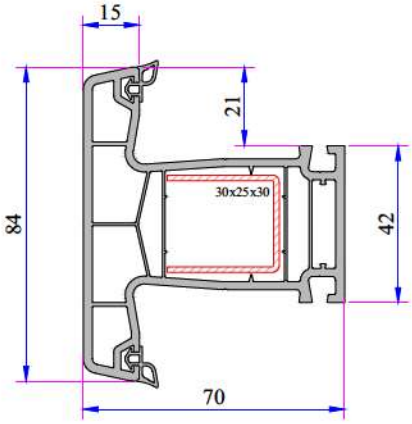

Mullion For Door Profile
750.3000

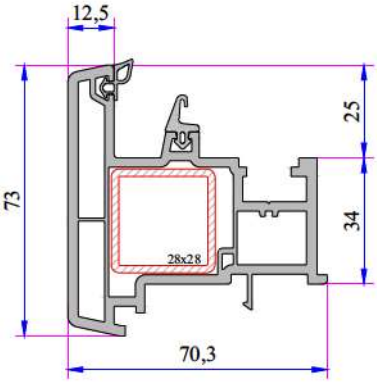

Lap Joint Profile
777.3100

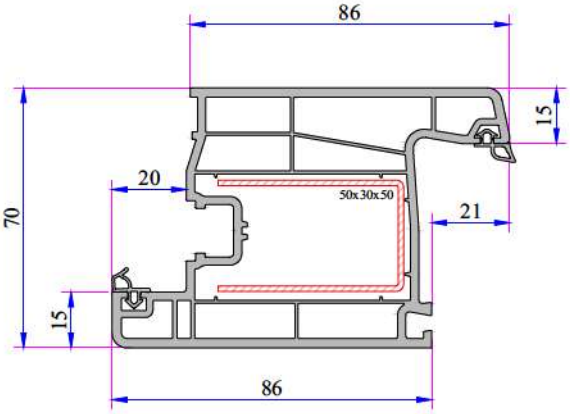

Door Sash Profile
750.2100

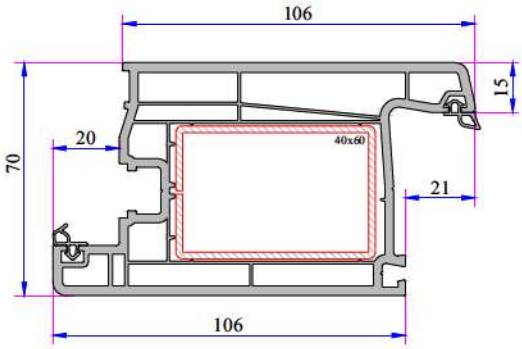

Super Door Sash Profile
750.2103

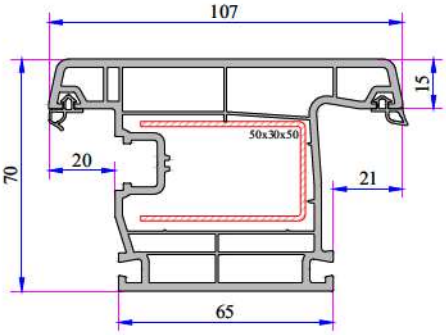

Outward Opening Door Sash Profile
750.2101

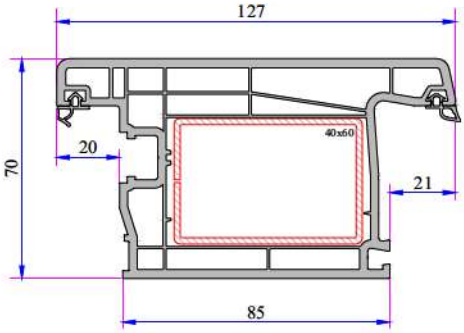

Outward Opening Super Door Sash Profile
752.2104

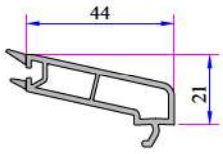

Single Glazing Bead
4-6 mm
P.A750.4000

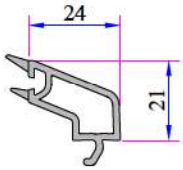

Double Glazing Bead
24 mm
750.4200

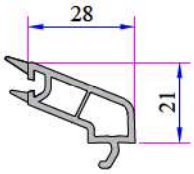

Double Glazing Bead
20 mm
750.4100

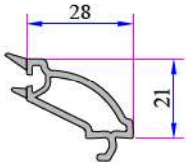

Dec. Double Glazing
Bead 20 mm
750.4102

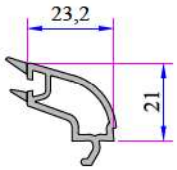

Double Glazing Bead
24 mm
750.4204

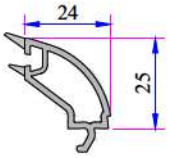

Double Glazing Bead
24 mm
777.4204

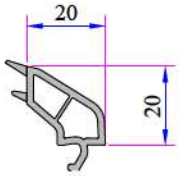

Double Glazing Bead
28 mm
101.4100

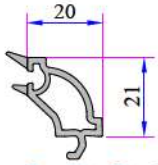

Dec. Double Glazing
Bead 28 mm
101.4102

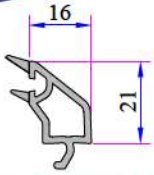

Triple Glazing Bead
32 mm
750.4500

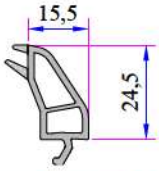

Triple Glazing Bead
32 mm
433.4200

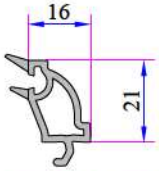

Dec. Triple Glazing Bead
32 mm
101.4202

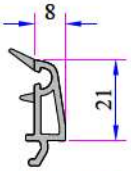

Triple Glazing Bead
40 mm
101.4500

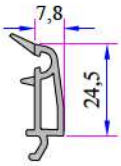

Triple Glazing Bead
40 mm
433.4500

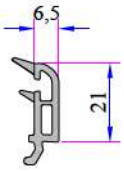

Triple Glazing Bead
42 mm
532.4500

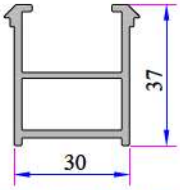

Frame Montage Profile
060.5301

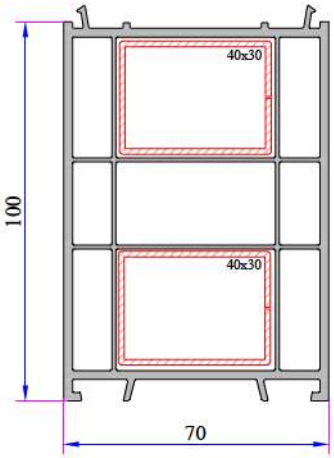

100mm Frame Lifting Profile
070.5302

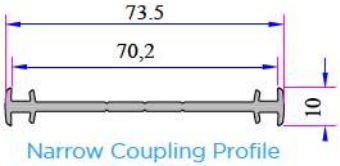

Narrow Coupling Profile
070.5001

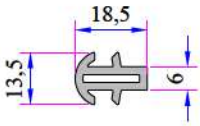

Short Coupling Profile
099.5003

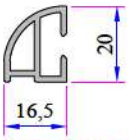

Offset Profile
900.6307

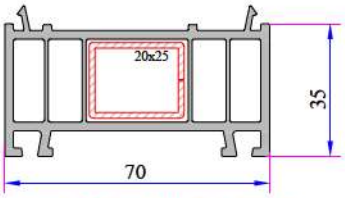

35mm Frame Lifting Profile
070.5300

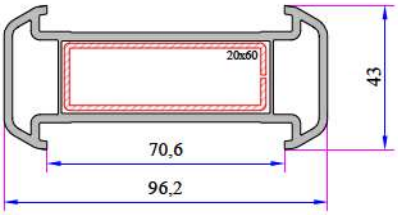

Large Coupling Profile
070.5000

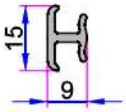

Universal Short Coupling Profile
099.5004

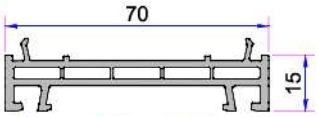

Frame Lifting Profile 15 mm
070.5304

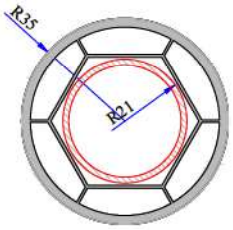

Pipe Profile
070.5106

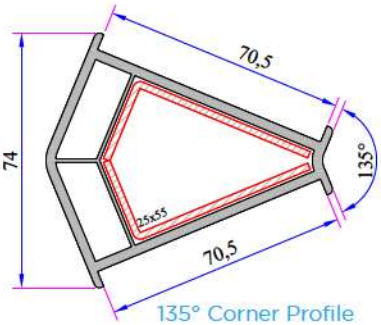

135° Corner Profile
070.5102

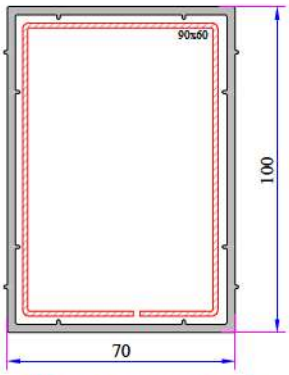

70x100 mm Box Profile
070.5202

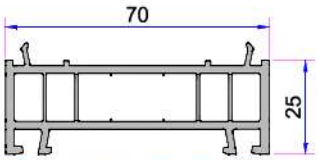

Frame Lifting Profile 25 mm
070.5306

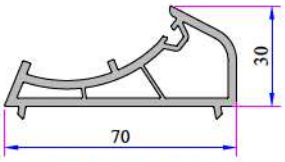

Angle Pipe Adaptor
Profile
070.5104

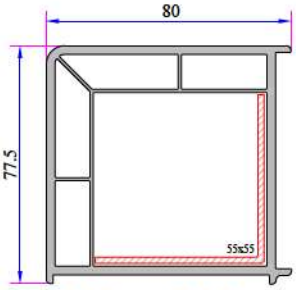

90° Corner Profile
070.5100

W 777 Re-Inforcement Profiles

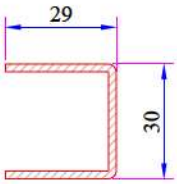

Frame - Sash - Mullion
Reinforcement
34022-12002

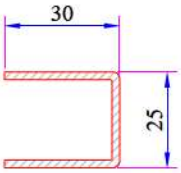

Mullion For Door Profile
Reinforcement
34022-12004

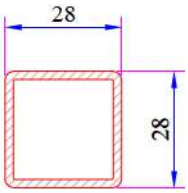

Lap Joint Profile
Reinforcement
34022-12113

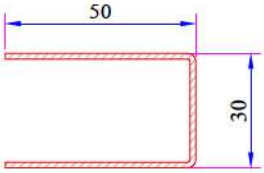

Door Sash - Outward
Opening Door Sash
Reinforcement
34022-12013

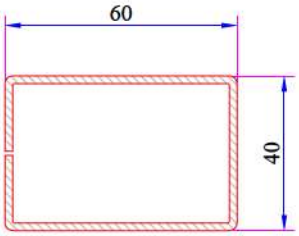

Super Door Sash - Super
Outward Opening Door
Sash Reinforcement
34022-12110

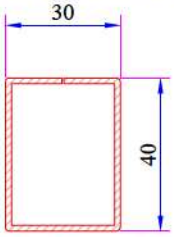

100mm Frame Lifting Profile Reinforcement
34022-12120

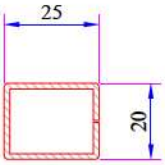

35mm Frame Lifting Profile Reinforcement
34022-12104

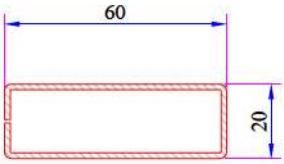

Large Coupling Profile Reinforcement
34022-12106

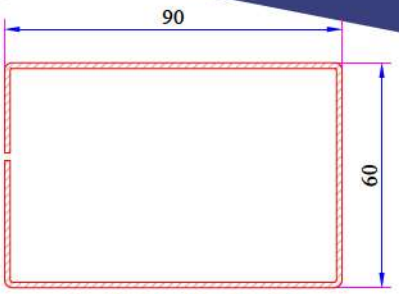

70x100mm Box Profile Reinforcement
34022-12121

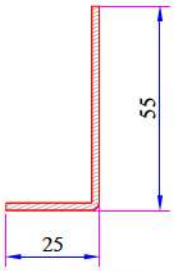

135° Corner Profile Reinforcement
34022-12303

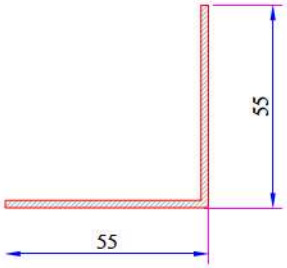

90° Corner Profile Reinforcement
34022-12305

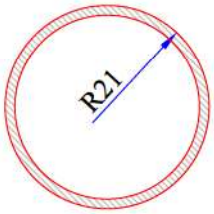

Pipe Profile Reinforcement
34022-12502

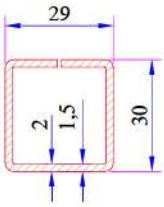

Mullion Profile Static Reinforcement
34022-15129

W 777 Installation

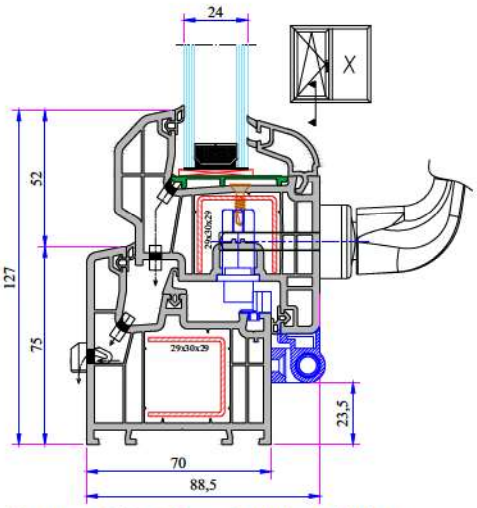

Frame - Offset Type Sash Installation

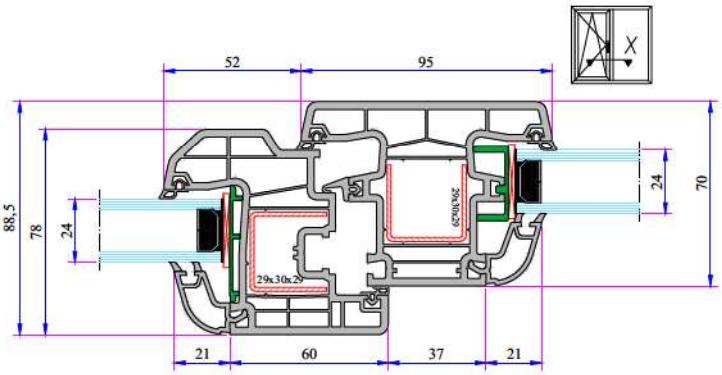

Mullion - Offset Type Sash Installation

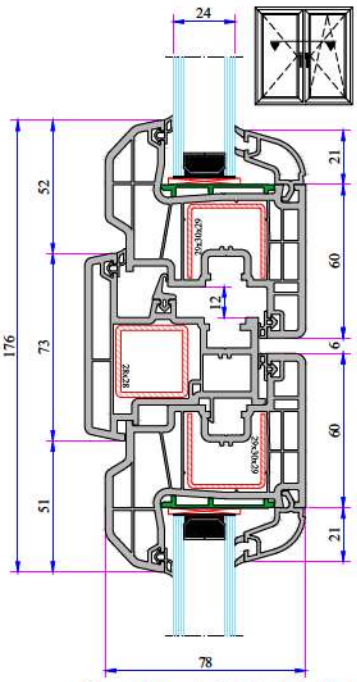

Sash Lap Joint And Sash Installation

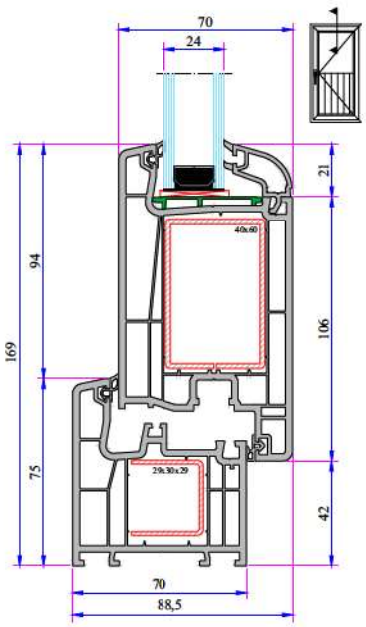

Frame - Super Door Sash Installation

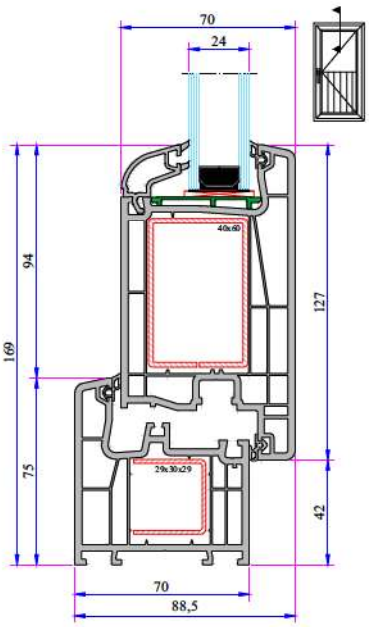

Frame - Super Outward Opening Door Sash Installation

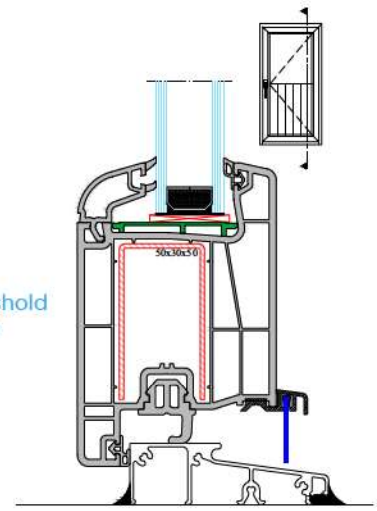

With Aluminium Threshold Frame Door Sash Installation

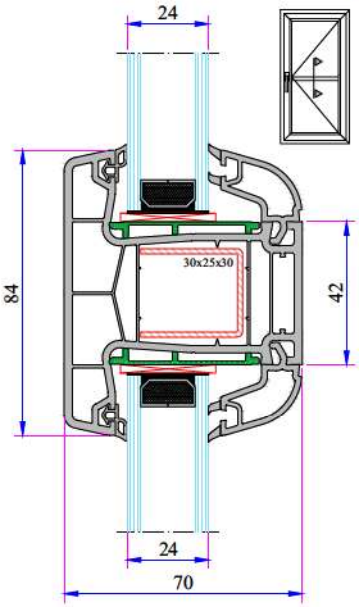

Door Sash Mullion Installation

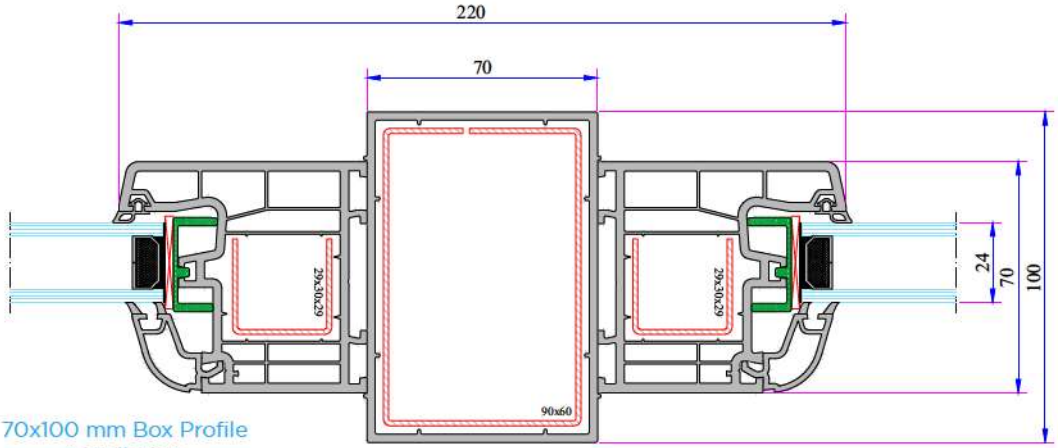

70x100 mm Box Profile Installation

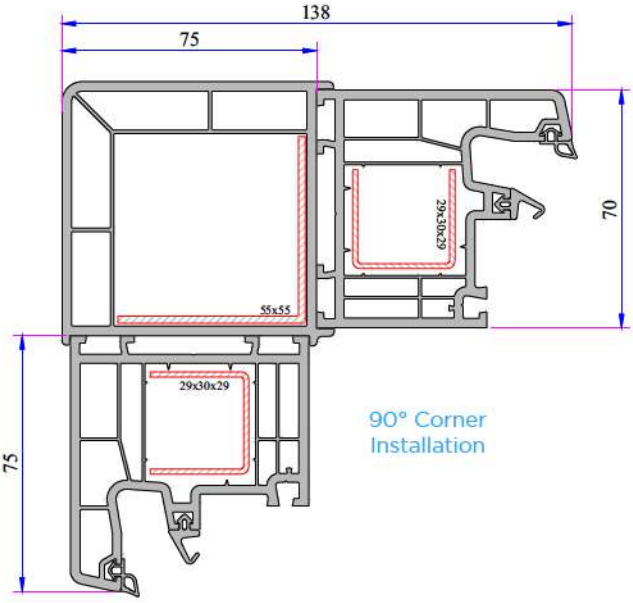

90° Corner Installation

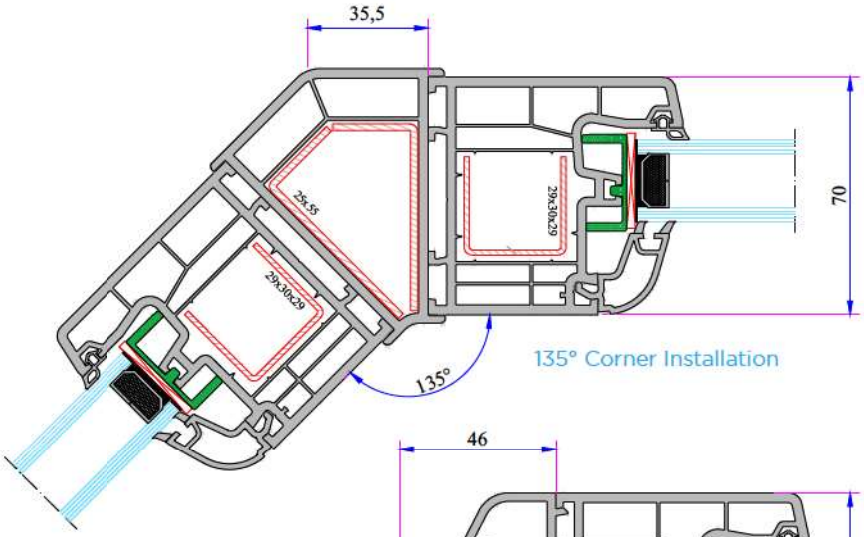

135° Corner Installation

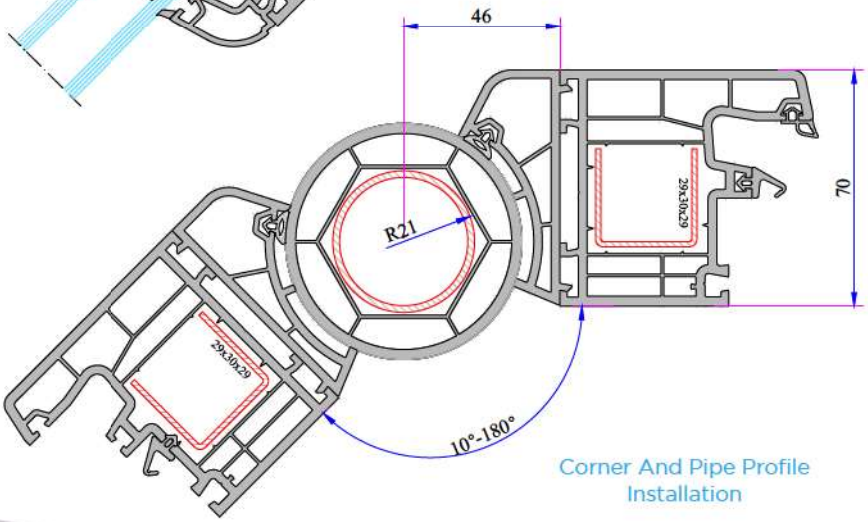

Corner And Pipe Profile Installation

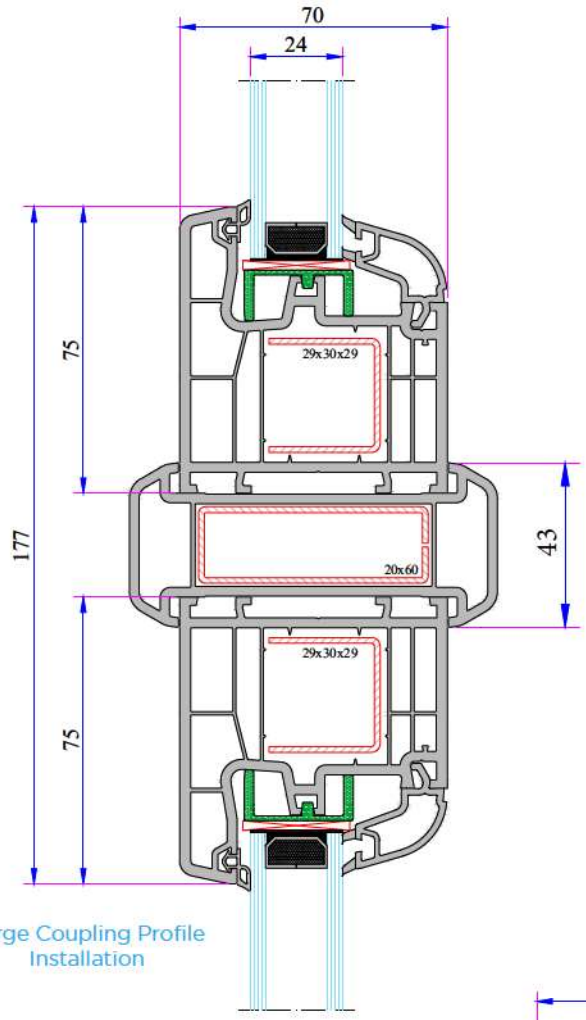

Large Coupling Profile Installation

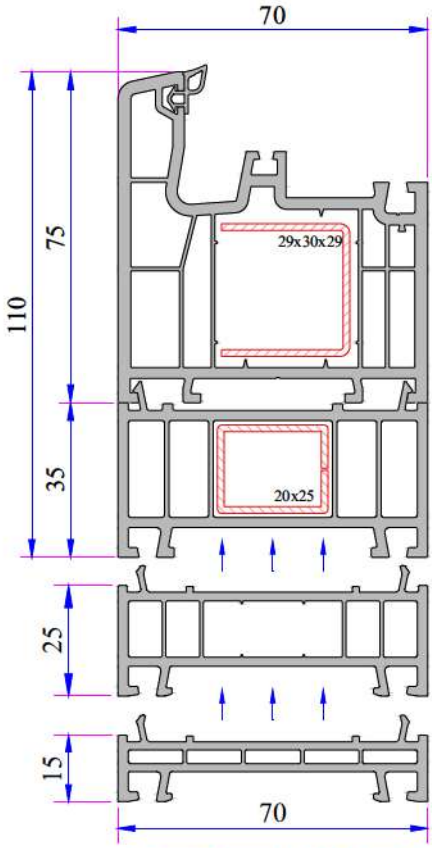

35 mm Frame Lifting Profile

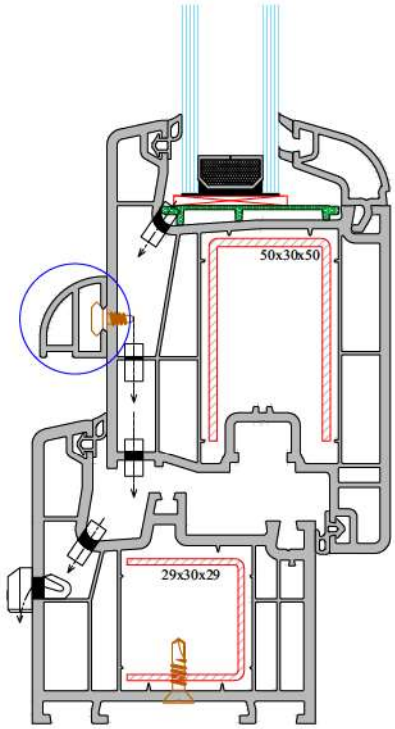

Offset Profile Installation

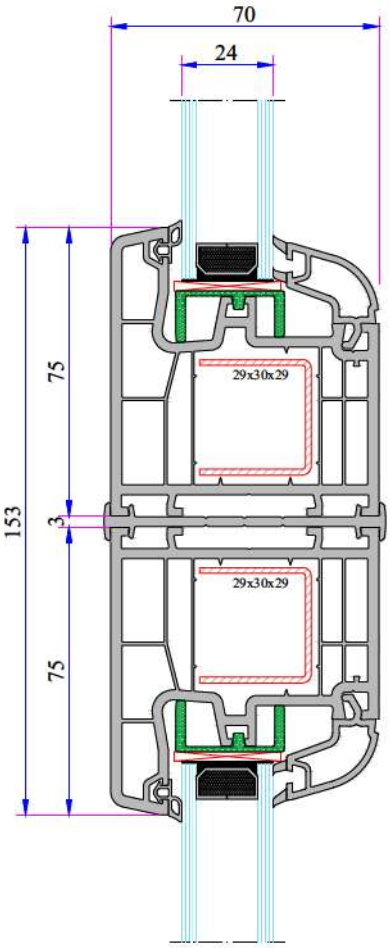

Narrow Coupling Profile Installation

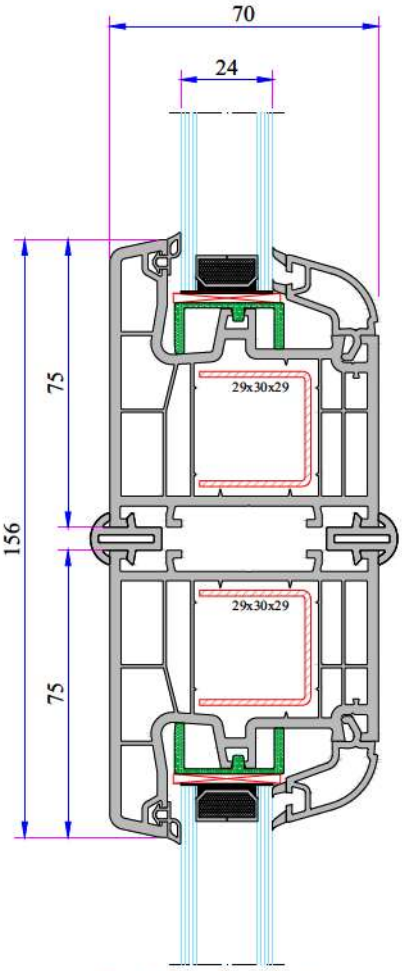

Short Coupling Profile Installation

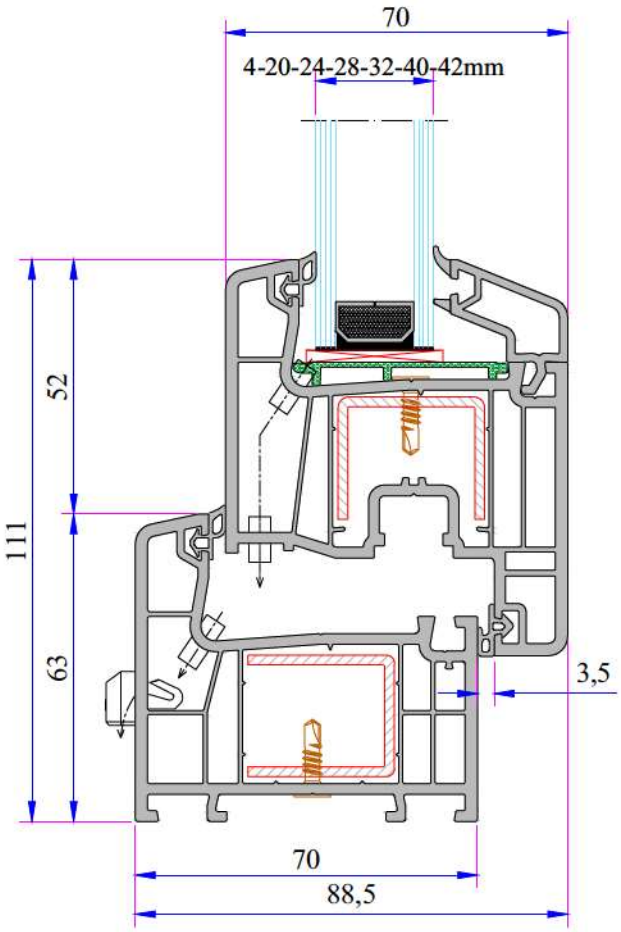

TECHNICAL

W 750 - 752 SERIES

Profile Width: 70 mm

Number of chambers: 5

Profile Class: W 752 A Class (TS EN 12608-1) / RAL 716-GZ

W 750 B Class (TS EN 12608-1)

Seal Type: External / Internal double seal system

Seal Type and Color: TPE – Grey /Black

Glass Thickness (mm): 4, 20, 24, 28, 32, 40, 42 mm

The thermal insulation Uf: 1,30 W/m²K

INSTRUCTION

· The main profiles have 70 mm width.

· Because of the elastic grey and black seal which does not leave any stain on profiles will be provided maximum air, water, dust and sound isolation.

· Due to the 5 chambers profiles, it has maximum performance for thermal, sound and water isolation.

· It is a series of profiles with very special design that provides maximum wind resistance on high rise buildings.

· Excluding normal sash profile, there is also chance to have a choice for offset type sash profile.

· In addition to white profile a different laminated color range is available.

· 4-5 mm single glazing application of 20, 24, 28, 32, 40, 42 mm glazing beads give us alternatives of using double, triple glazing and panels.

· It provides the visual integrity in the inner surface and the frame-wall connections due to integrated frame with sill profile.

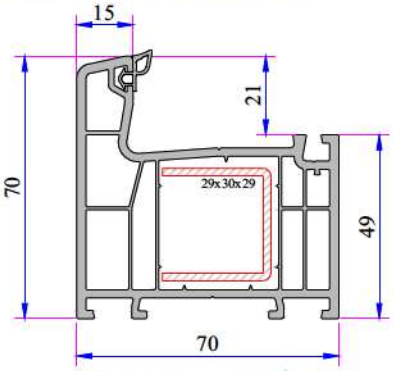

Super Frame Profile
752.1001 (A Class)
750.1001 (B Class)

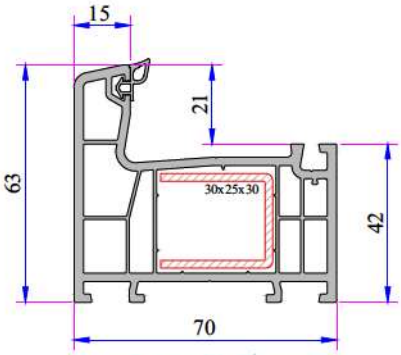

Frame Profile
752.1000 (A Class)
750.1000 (B Class)

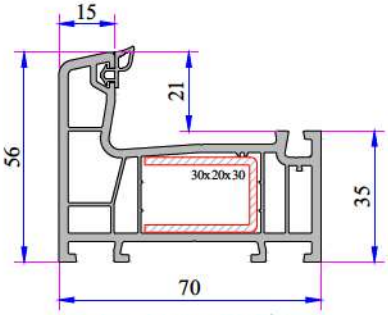

Eco Frame Profile
750.1003

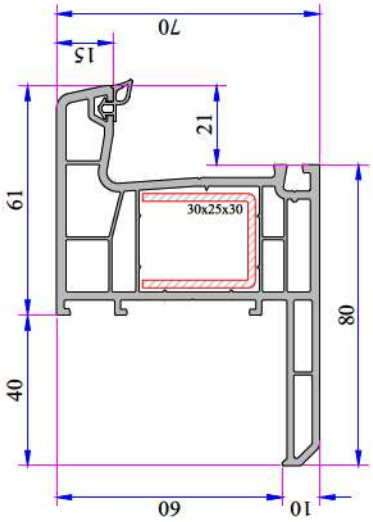

Frame Profile With Sill
752.1200 (A Class)
750.1200 (B Class)

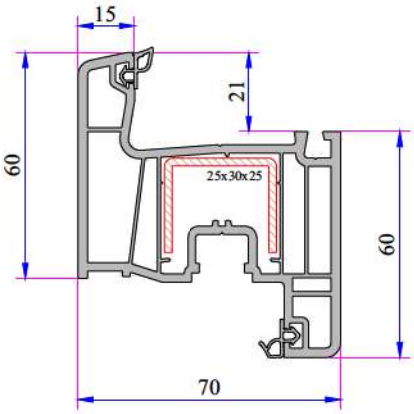

Sash Profile
752.2000 (A Class)
750.2000 (B Class)

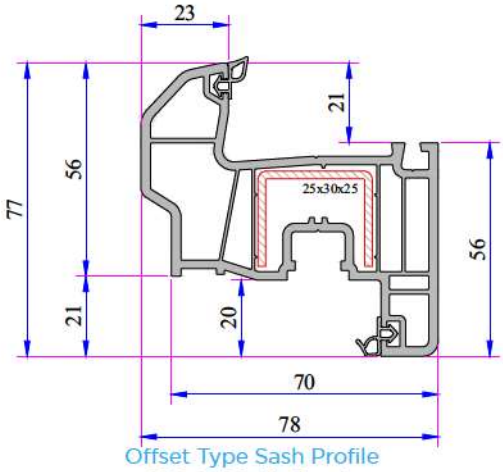

Offset Type Sash Profile
752.2200 (A Class)
750.2200 (B Class)

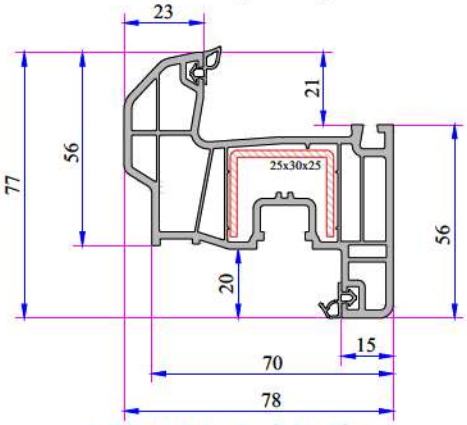

Offset Type Sash Profile
(6 Chambers)
750.2205

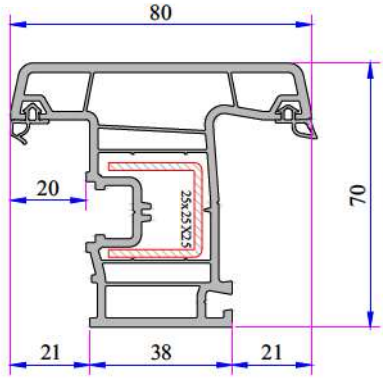

Outward Opening Sash Profile
750.2001

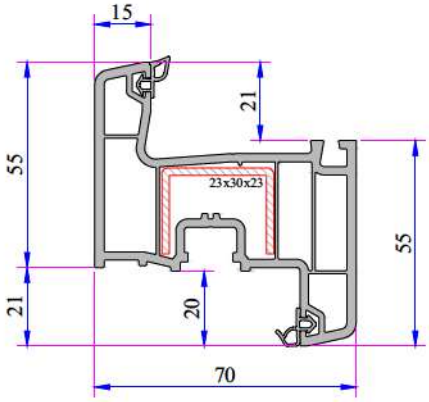

24 Axis Sash Profile
750.2003

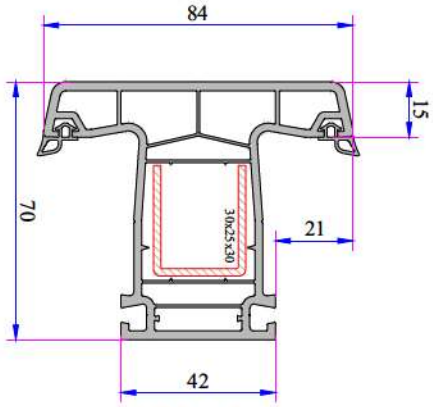

Mullion Profile
752.3000 (A Class)
750.3000 (B Class)

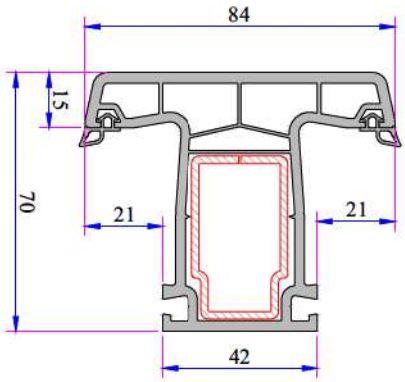

Static Mullion Profile
750.3007

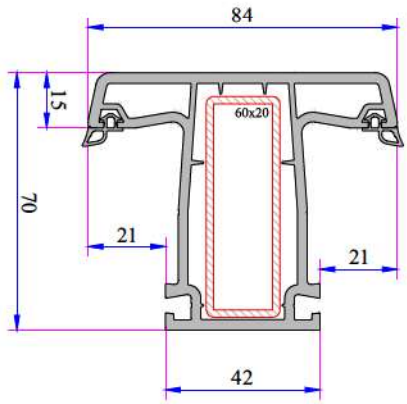

Super Static Mullion Profile
750.3009

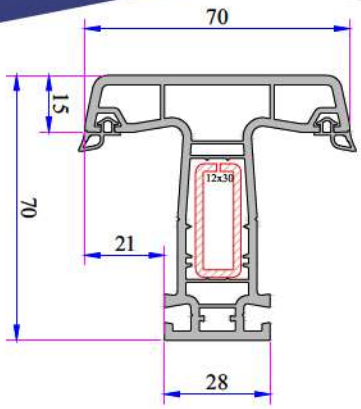

Eco Mullion Profile
750.3006

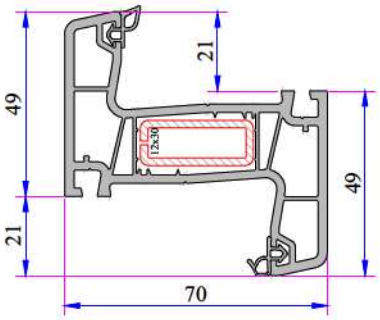

Outward Opening Mullion Profile
750.3005

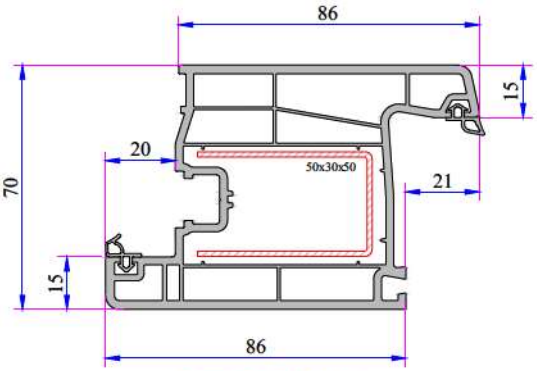

Door Sash Profile
752.2100 (A Class)
750.2100 (B Class)

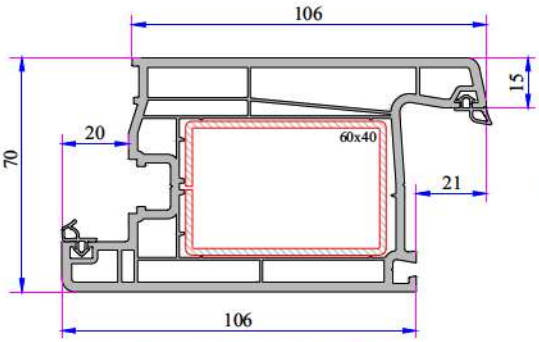

Super Door Sash Profile
750.2103

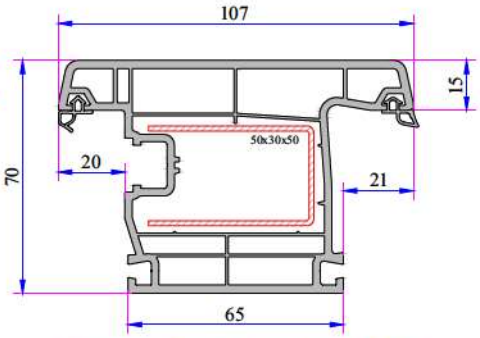

Outward Opening Door Sash Profile
750.2101

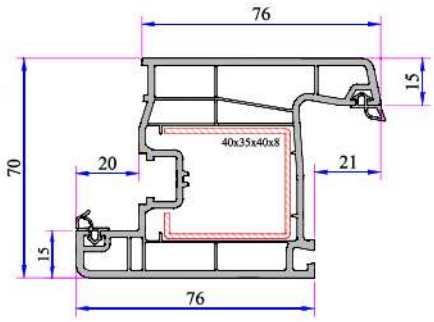

Narrow Door Sash Profile
750.2111

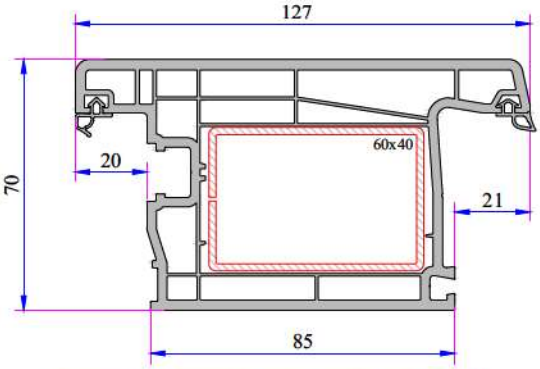

Outward Opening Super Door Sash Profile
752.2104

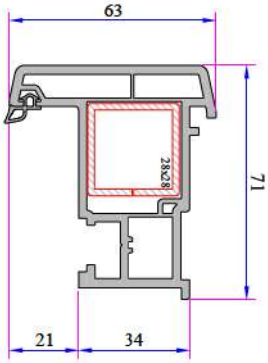

Lap Joint Profile
750.3100

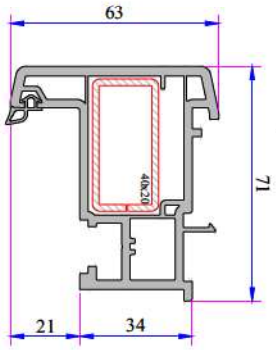

Static Lap Joint Profile (Spiked)
750.3101 (A Class)

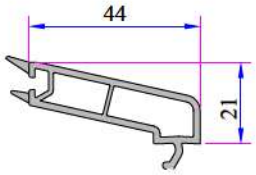

Single Glazing Bead 4-6 mm
750.4000

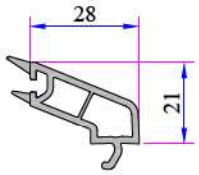

Double Glazing Bead 20 mm
750.4100

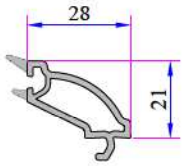

Decorative Double Glazing Bead 20 mm
750.4102

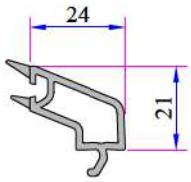

Double Glazing Bead 24 mm
750.4200

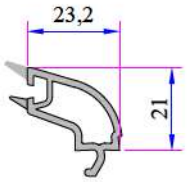

Decorative Double Glazing Bead 24 mm
750.4204

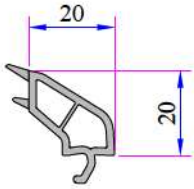

Double Glazing Bead 28 mm
101.4100

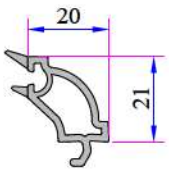

Decorative Double Glazing Bead 28 mm
101.4102

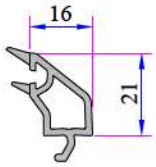

Triple Glazing Bead 32 mm
750.4500

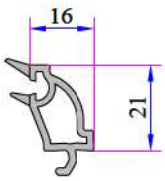

Decorative Triple Glazing Bead 32 mm
101.4202

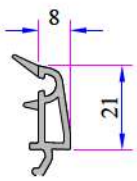

Triple Glazing Bead 40 mm
101.4500

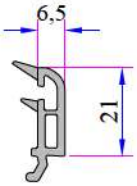

Triple Glazing Bead 42 mm
532.4500

W 750 - W 752 SERIES
PVC PROFILE SYSTEM

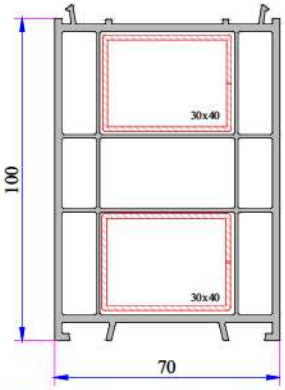

100mm Frame Lifting Profile
070.5302

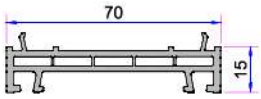

Frame Lifting Profile 15 mm
070.5304

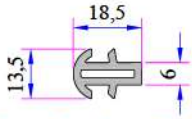

Short Coupling Profile
PA 99.5003

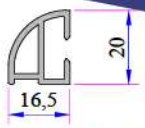

Offset Profile
900.6307

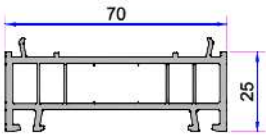

Frame Lifting Profile 25 mm
070.5306

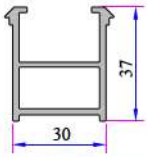

Frame Montage Profile
060.5301

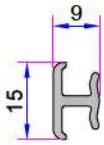

Universal Short Coupling Profile
099.5004

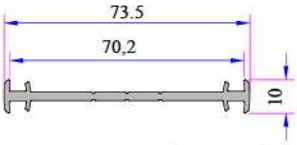

Narrow Coupling Profile
070.5001

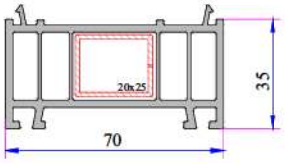

35mm Frame Lifting Profile
070.5300

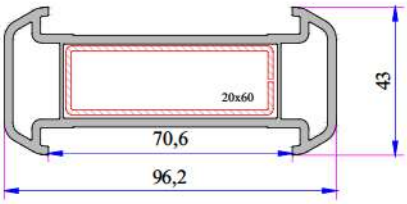

Large Coupling Profile
070.5000

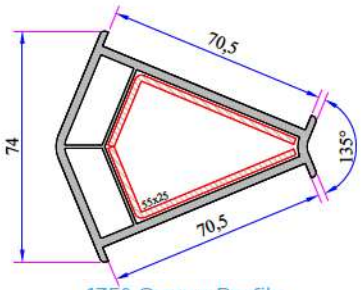

135° Corner Profile
070.5102

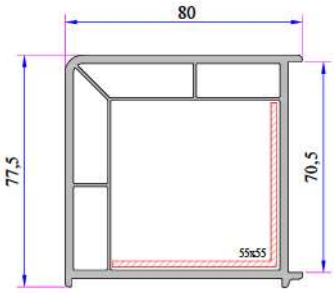

90° Corner Profile
070.5100

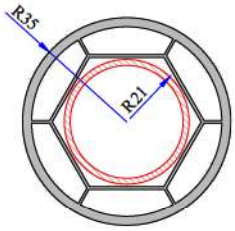

Pipe Profile
070.5106

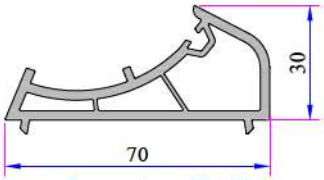

Corner Lag Profile
070.5104

W 750 - 752 Re-Inforcement Profiles

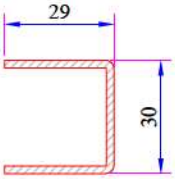

Super Frame Profile Reinforcement
34022-12002

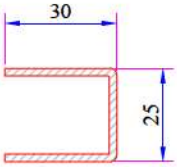

Frame - Frame with Sill - Mullion Profile Reinforcement
34022-12004

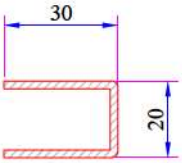

Eco Frame Profile Reinforcement
34022-12006

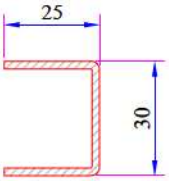

Sash - Offset Type Sash Profile Reinforcement
34022-12025

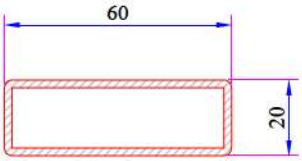

Static Mullion Profile Reinforcement
34022-12106

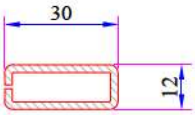

Eco Mullion Profile Reinforcement
34022-12115

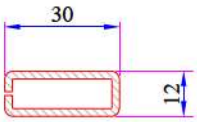

Outward Opening Mullion Profile Reinforcement
34022-12115

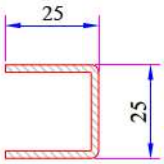

Outward Opening Sash Profile Reinforcement
34022-12003

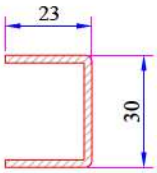

24 Axis. Sash Profile Reinforcement
34022-12030

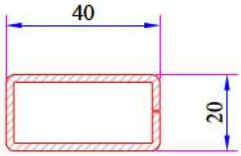

Static Lap Joint Profile Reinforcement
34022-12114

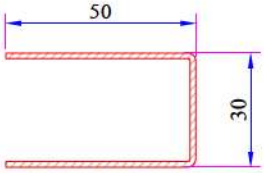

Door Sash - Outward Opening Door Sash Profile Reinforcement
34022-12013

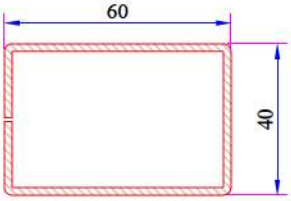

Super Door Sash - Outward Opening Super Door Sash Profile Reinforcement
34022-12110

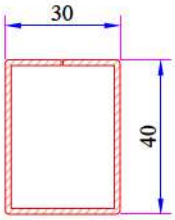

100mm Frame Lifting Profile Reinforcement
34022-12120

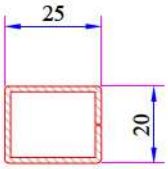

35mm Frame Lifting Profile Reinforcement
34022-12104

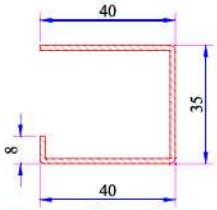

Narrow Door Sash Profile Reinforcement
34022-12047

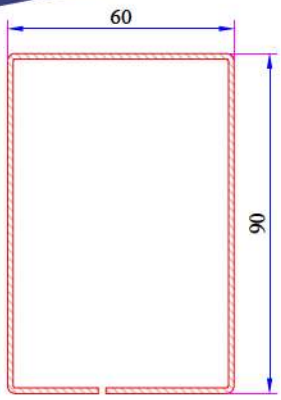

70x100mm Box Profile Reinforcement
34022-12121

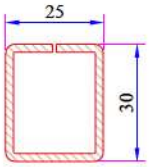

Mullion Profile Static Reinforcement
34022-12119

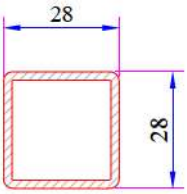

Lap Joint Profile Reinforcement
34022-12113

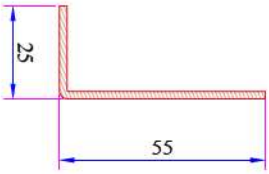

135° Corner Profile Reinforcement
34022-12303

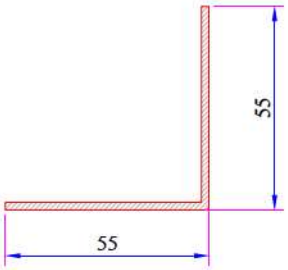

90° Corner Profile Reinforcement
34022-12305

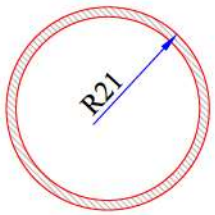

Pipe Profile Reinforcement
34022-12502

W 750 - 752 Installation

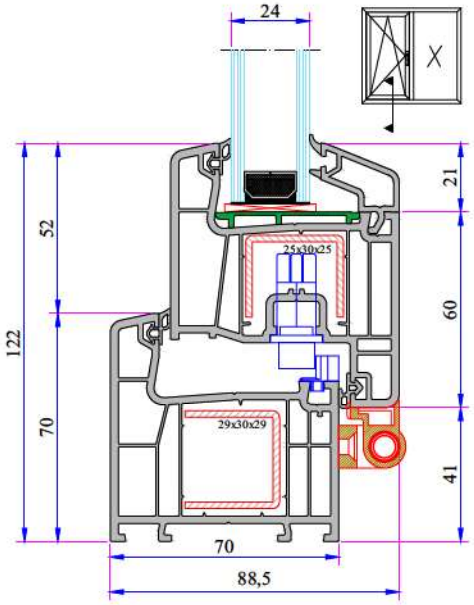

Frame - Sash Installation

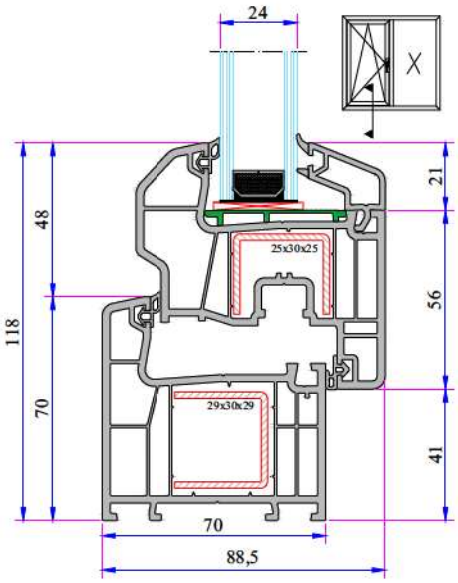

Frame - Offset Type Sash Installation

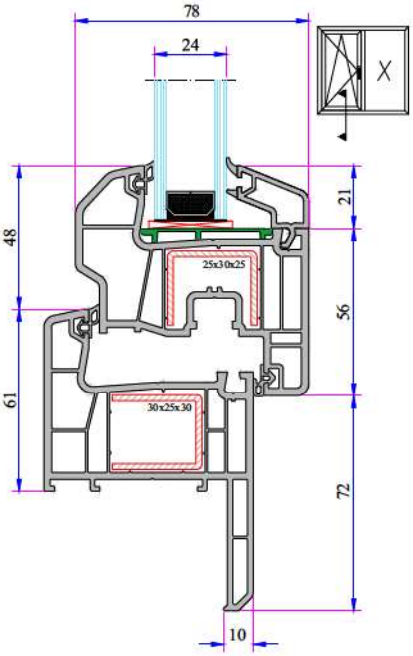

Frame With Sill - Sash Installation

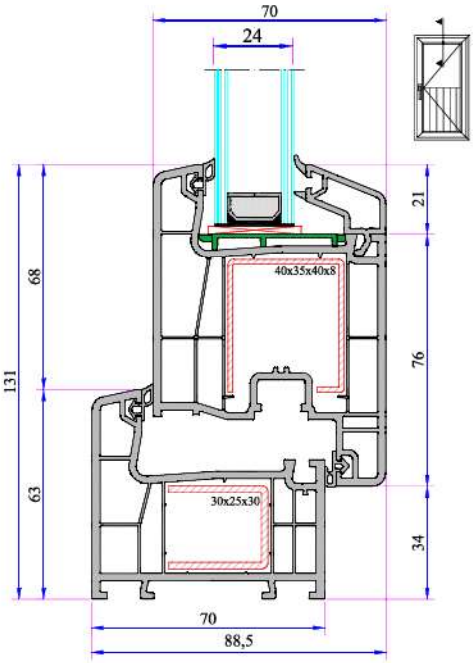

Frame - Narrow Door Sash Installation

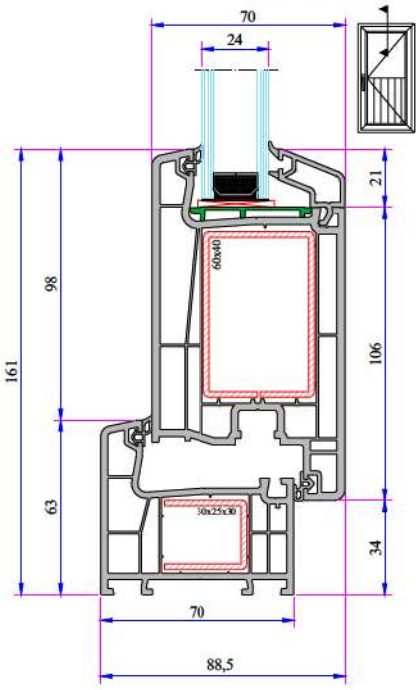

Frame - Super Door Sash Installation

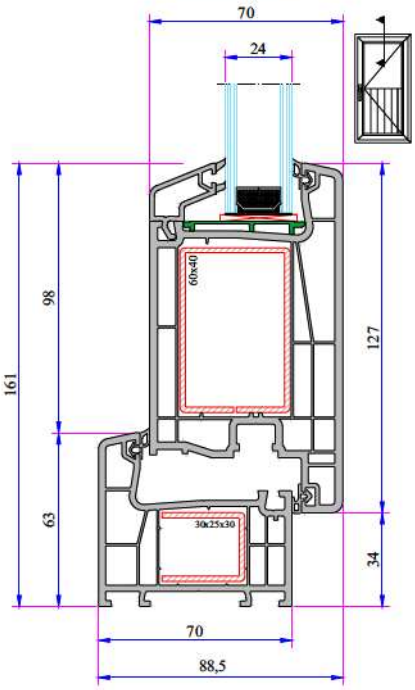

Frame - Super Outward Opening Door Sash Installation

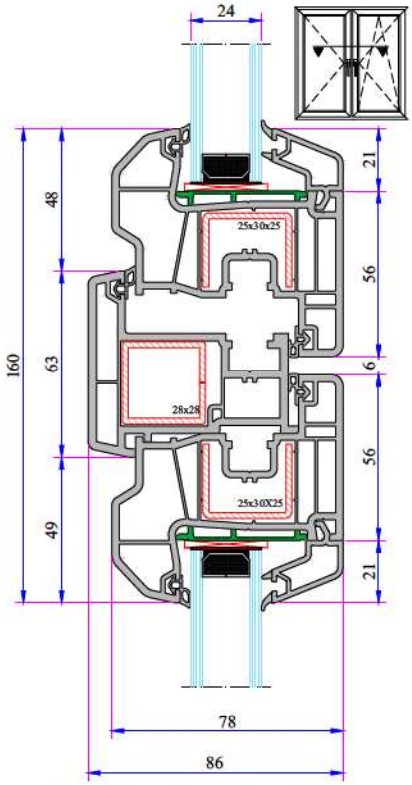

Sash - Lap Joint - Sash Profile Installation

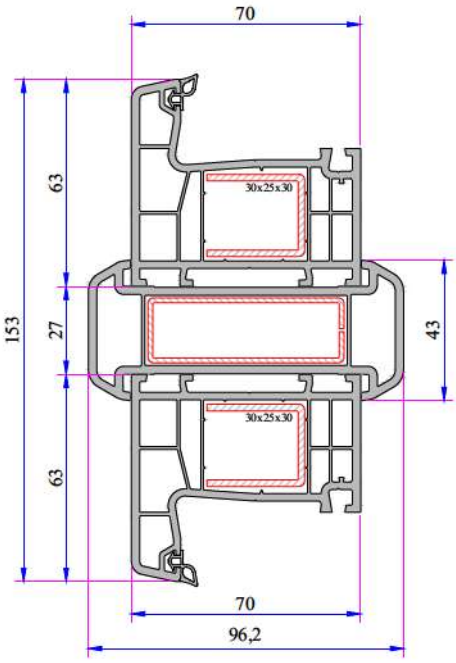

Large Coupling Profile Installation

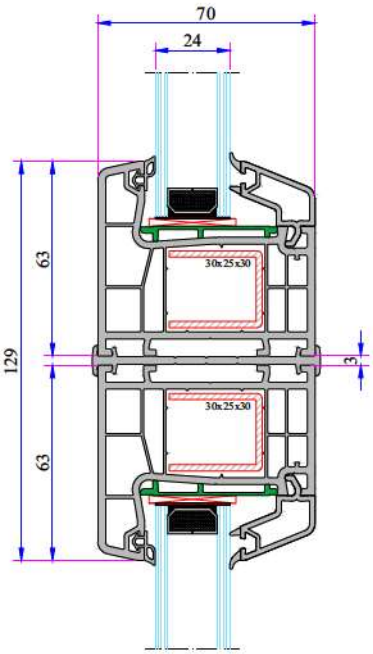

Narrow Coupling Profile Installation

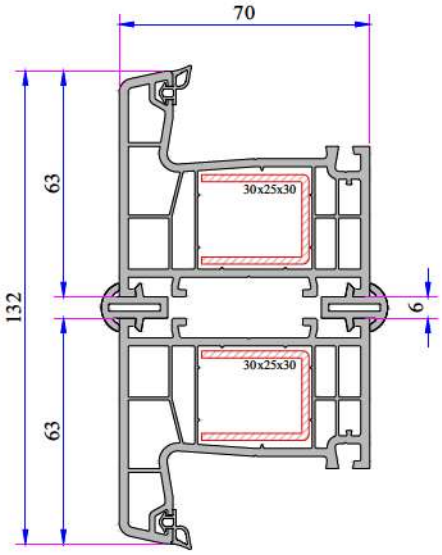

Short Coupling Profile Installation

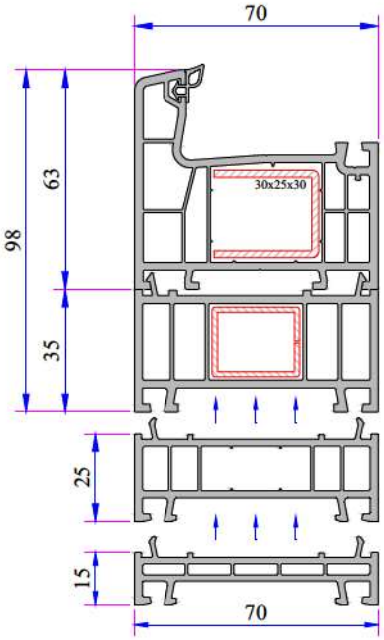

35mm Frame Lifting Profile Installation

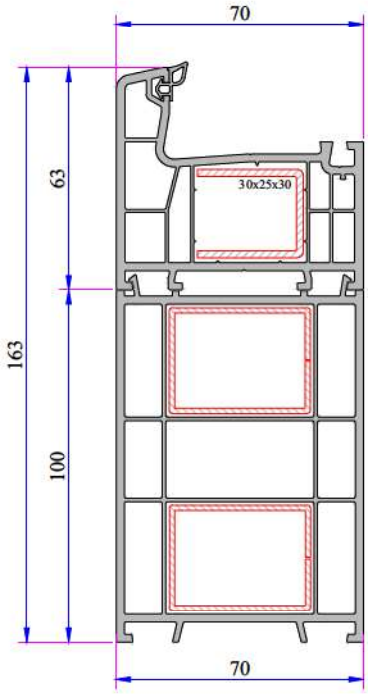

100mm Frame Lifting Profile Installation

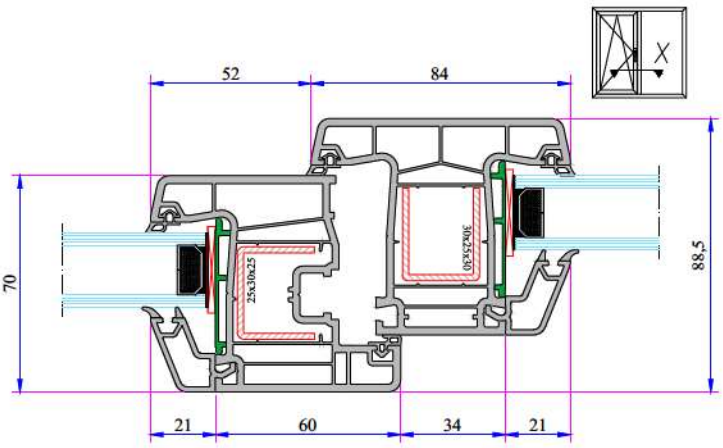

Mullion - Sash Installation

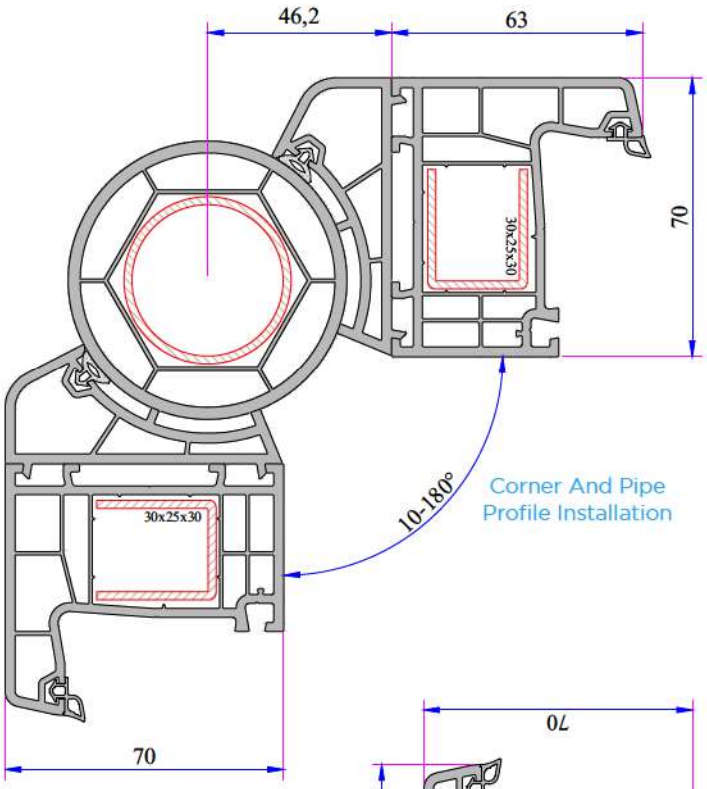

Corner And Pipe Profile Installation

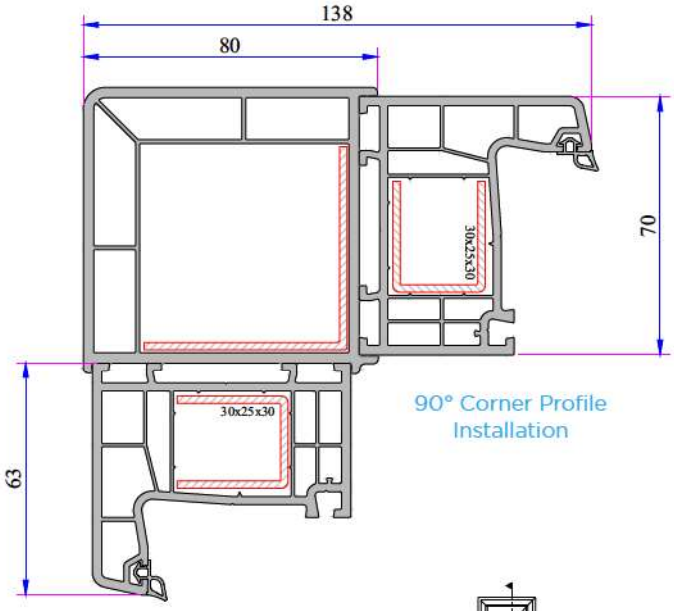

90° Corner Profile Installation

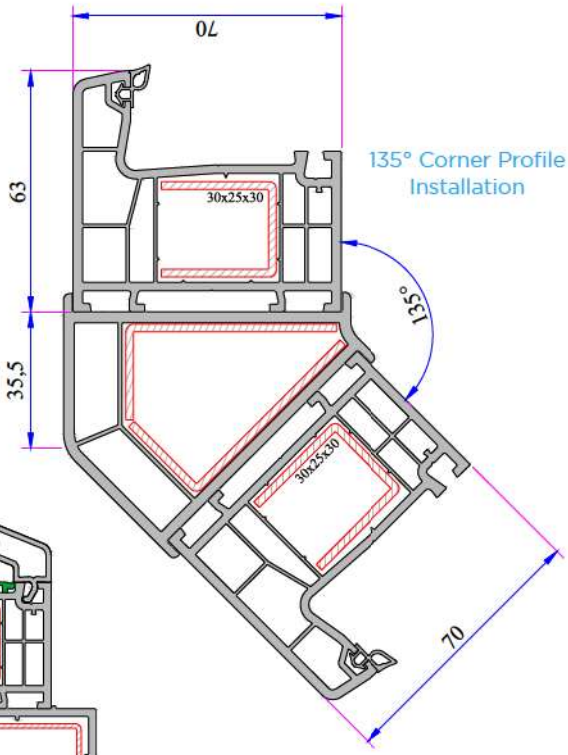

135° Corner Profile Installation

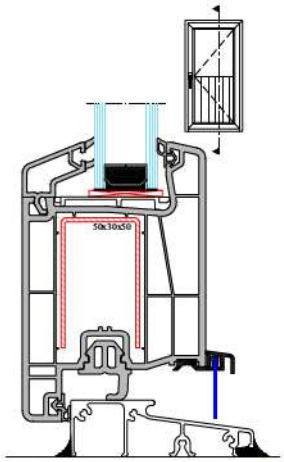

With Aluminium Threshold Frame Door Sash Installation

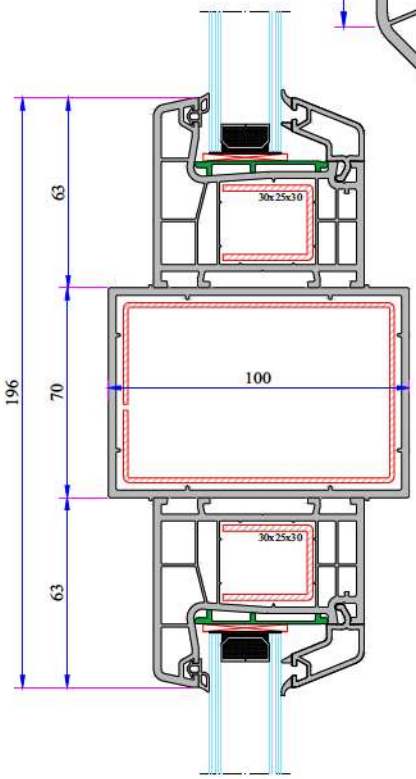

70x100mm Box Profile Installation

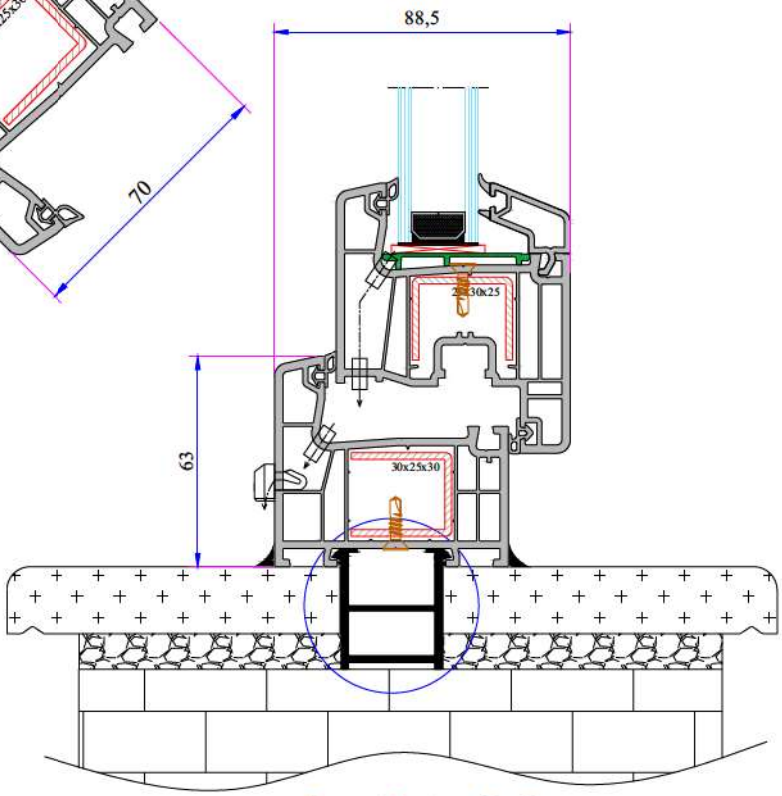

Frame Montage Profile Installation

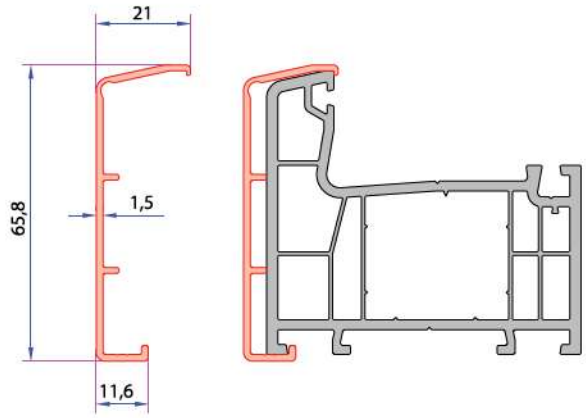

Aluminium Cladding Profile With Frame

34025 - 28010 (Alm. Color)
34025 - 29015 (Bronze)

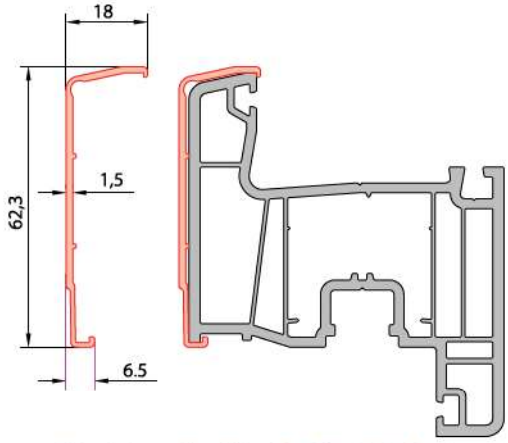

Aluminium Cladding Profile With Sash

34025 - 28030 (Alm. Color)
34025 - 29035 (Bronze)

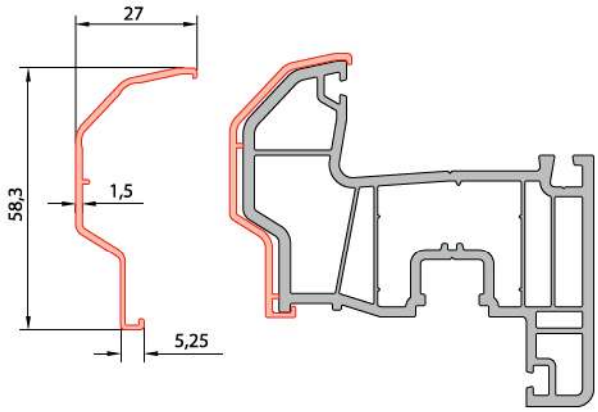

Aluminium Cladding Profile With Offset Sash

34025 - 28040 (Alm. Color)
34025 - 29045 (Bronze)

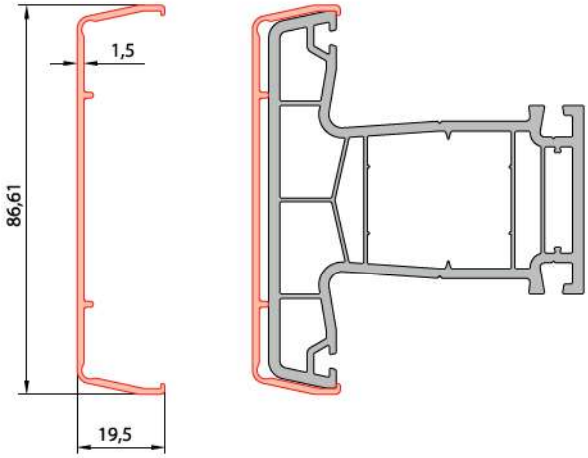

Aluminium Cladding Profile With Mullion

34025 - 28050 (Alm. Color)
34025 - 29055 (Bronze)

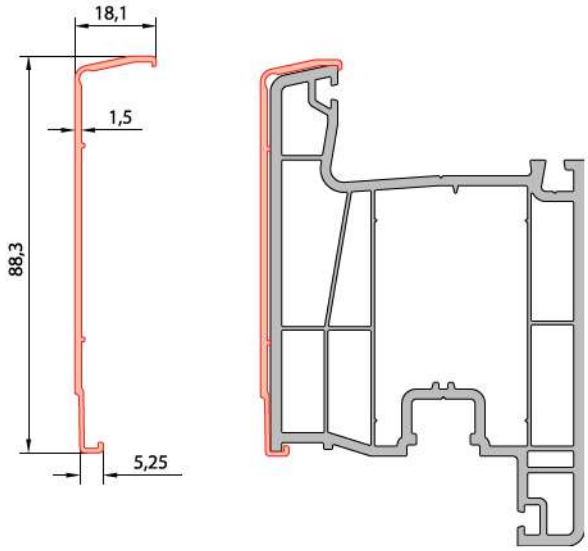

Aluminium Cladding Profile With Door Sash

34025 - 28060 (Alm. Color)
34025 - 29065 (Bronze)

Aluminium Color

Bronze Color

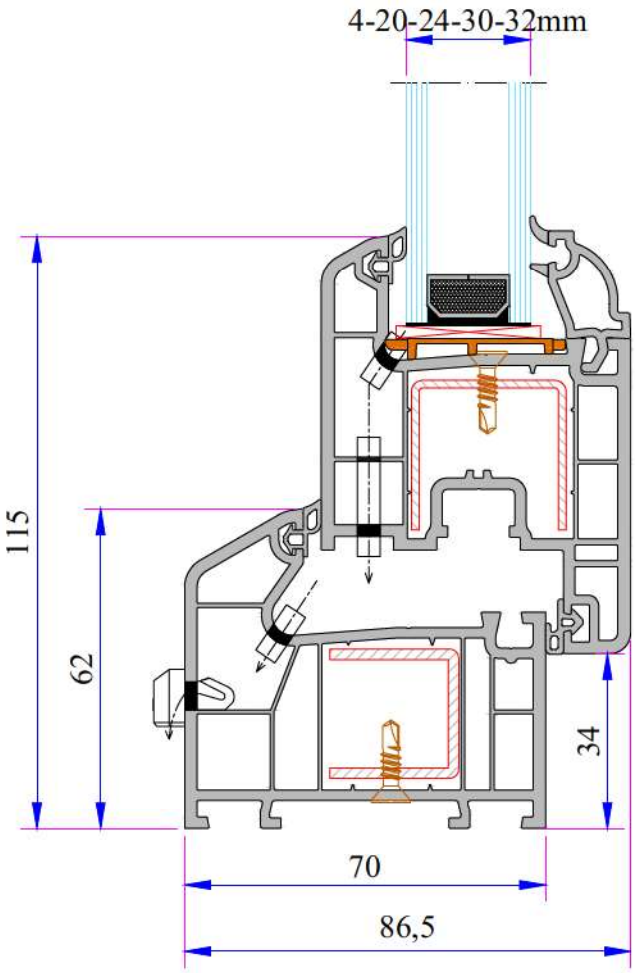

TECHNICAL

W 760 SERIES

Profile Width: 70 mm

Number of chambers: 5

Profile Class: B Class (TS EN 12608-1)

Seal Type: External / Internal double seal system

Seal Type and Color: TPE – Grey /Black

Glass Thickness (mm): 4, 20, 24, 30, 32 mm

The thermal insulation Uf: 1,45 W/m²K

INSTRUCTION

· The main profiles have 70 mm width.

· Because of the elastic grey and black seal which does not leave any stain on profiles will be provided maximum air, water, dust and sound isolation.

· Due to the 5 chambers profiles, it has maximum performance for thermal, sound and water isolation.

· It is a series of profiles with very special design that provides maximum wind resistance on high rise buildings.

· In addition to white profile a different laminated color range is available.

· 4-5 mm single glazing application of 20, 24, 28, 30, 32 mm glazing beads give us alternatives of using double, triple glazing and panels.

W 760 SERIES
PVC PROFILE SYSTEM

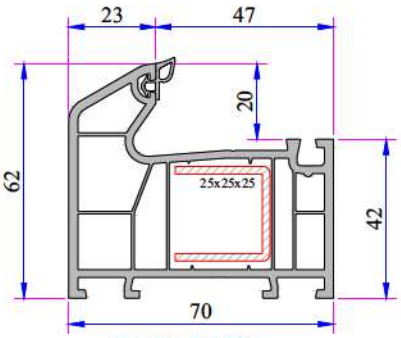

Frame Profile
706.1000

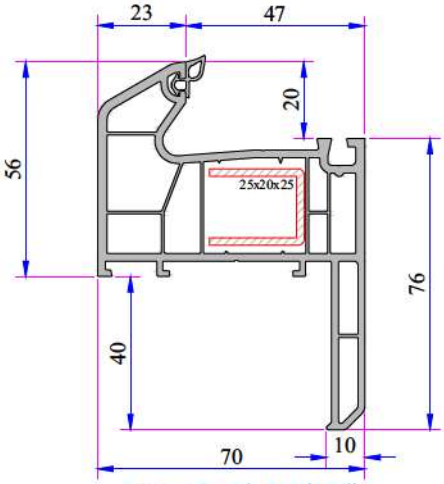

Frame Profile With Sill
706.1200

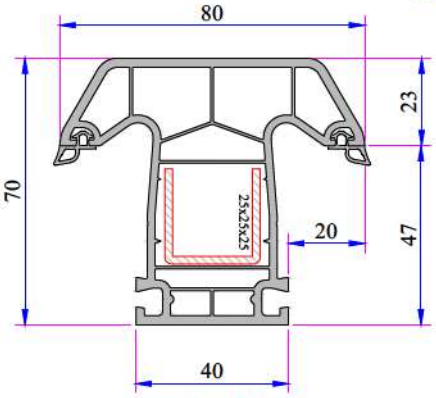

Mullion Profile
706.3000

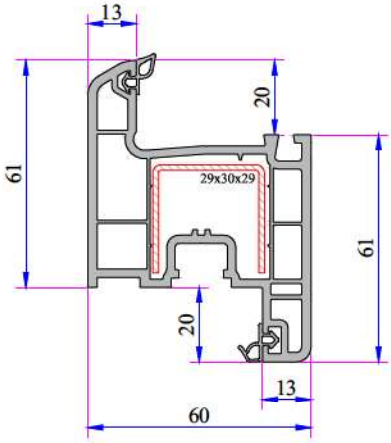

Sash Profile
632.2000

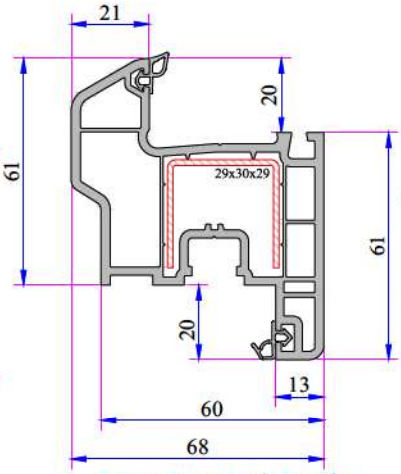

Offset Type Sash Profile
632.2200

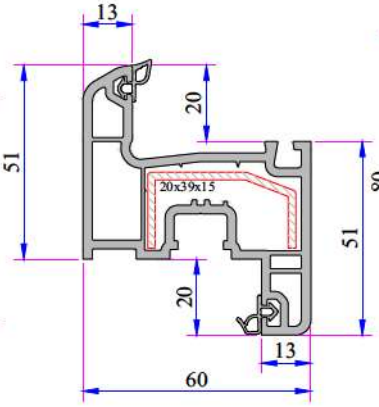

Narrow Sash Profile
900.2005

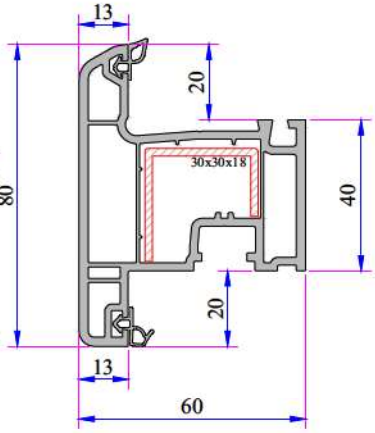

Outward Opening Sash Profile
632.2014

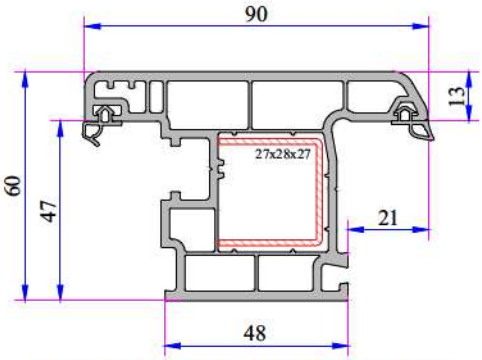

Outward Opening Sash Profile (9 Axis)
430.2001

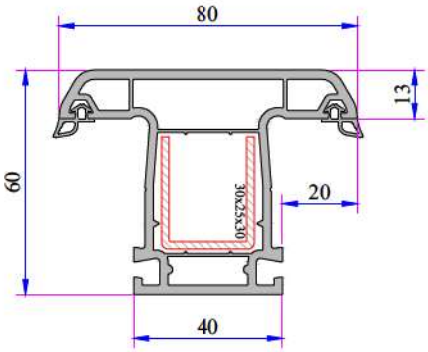

Mullion For Door Profile
632.3000

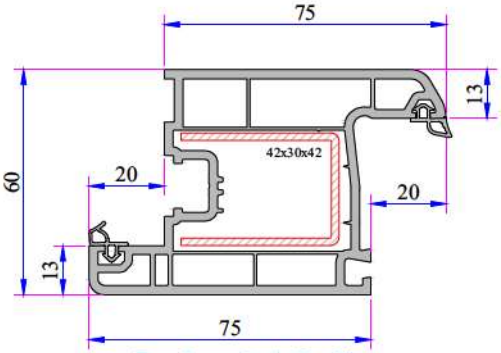

Eco Door Sash Profile
900.2107

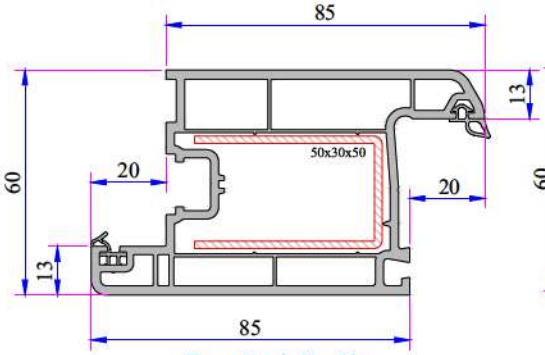

Door Sash Profile
632.2100

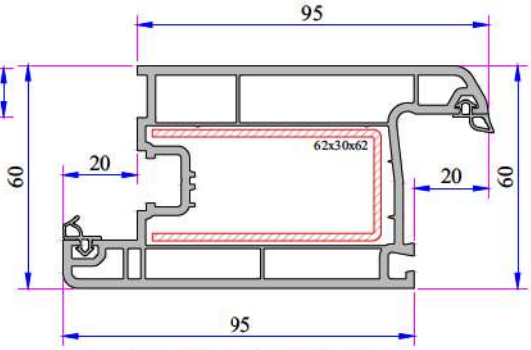

Super Door Sash Profile
900.2100

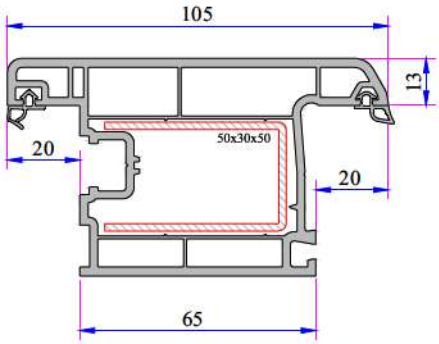

Outward Opening Door Sash Profile
632.2101

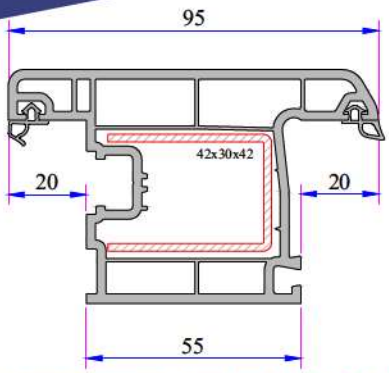

Outward Opening Eco Door Sash Profile
632.2108

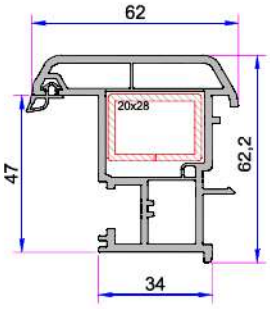

Lap Joint Profile
632.3104

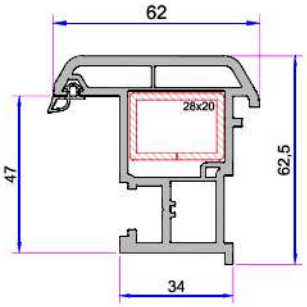

Lap Joint Profile
632.3100

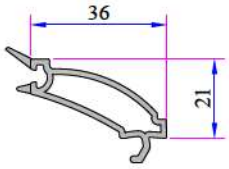

Single Glazing
Bead 4-6mm
101.4002

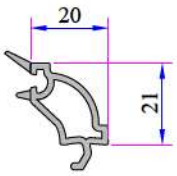

Double Glazing
Bead 20mm
101.4102

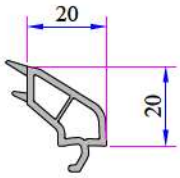

Single Glazing
Bead 20mm
101.4100

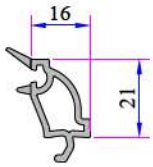

Double Glazing
Bead 24mm
101.4202

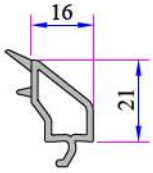

Double Glazing
Bead 24mm
750.4500

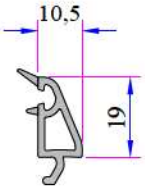

Triple Glazing
Bead 30mm
332.4100

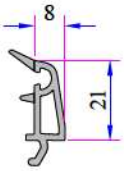

Triple Glazing
Bead 32mm
101.4500

** 760 series Frame and Mullion Profile Glazing Bead dimensions is different. For frame and Muliion Profile Glass size check page 170.

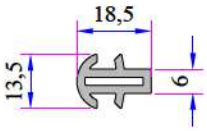

Short Coupling Profile
099.5003

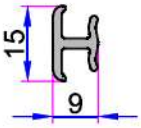

Universal Short Coupling Profile
099.5004

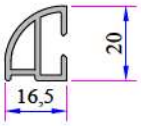

Offset Coupling Profile
900.6307

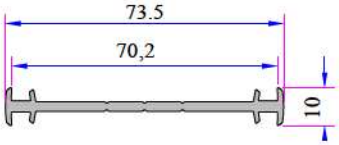

Narrow Coupling Profile
070.5001

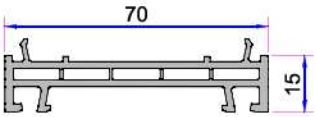

Frame Lifting Profile 15 mm
070.5304

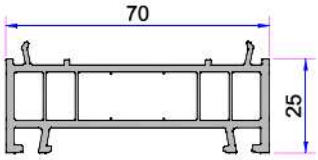

Frame Lifting Profile 25 mm
070.5306

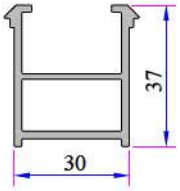

Frame Montage Profile
060.5301

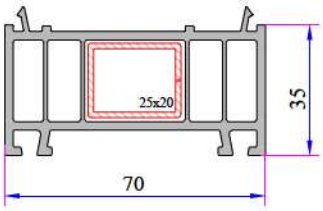

35mm Frame Lifting Profile
070.5300

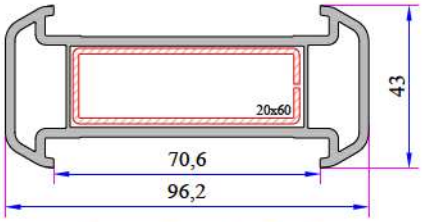

Large Coupling Profile
070.5000

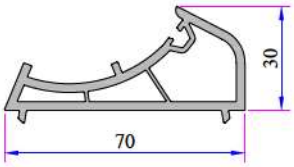

Angle Pipe Adaptor Profile
070.5104

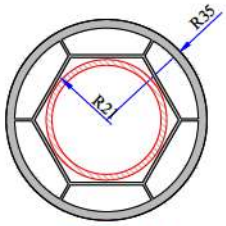

Pipe Profile
070.5106

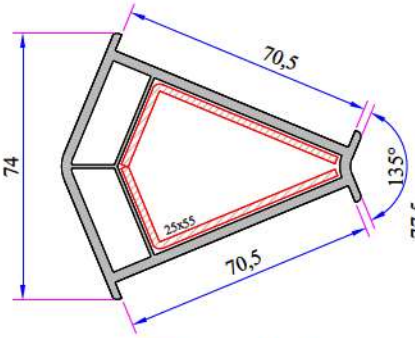

135° Corner Profile
070.5102

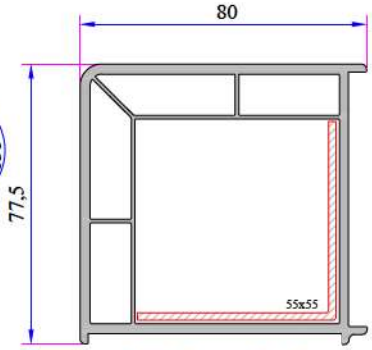

90° Corner Profile
070.5100

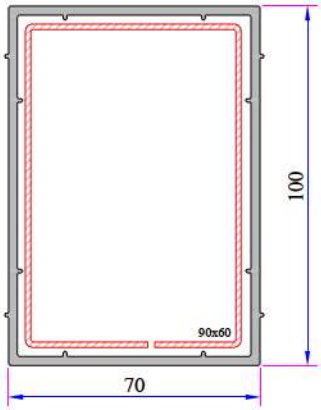

70x100mm Box Profile
070.5202

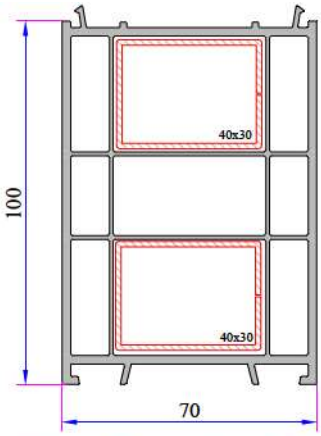

100mm Frame Lifting Profile
070.5302

W 760 Re-Inforcement Profiles

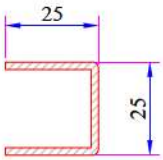

Frame - Mullion Profile Reinforcement
34022-12003

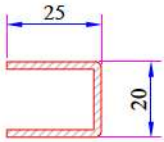

Frame with Sill Profile Reinforcement
34022-12021

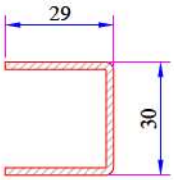

Sash - Offset Type Sash Profile Reinforcement
34022-12002

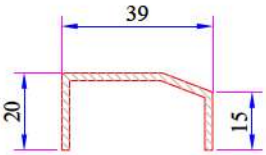

Narrow Sash Profile Reinforcement
34022-12031

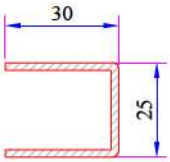

Mullion For Door Profile Reinforcement
34022-12004

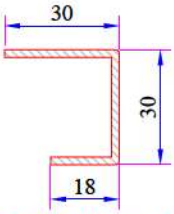

Outward Opening Sash Profile Reinforcement
34022-12022

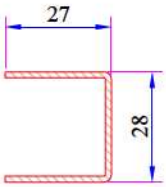

Outward Opening Sash Profile (9 Axis) Reinforcement
34022-12020

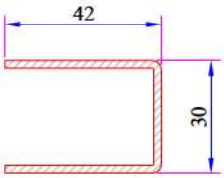

Eco Door Sash - Outward Opening Eco Door Sash Profile Reinforcement
34022-12023

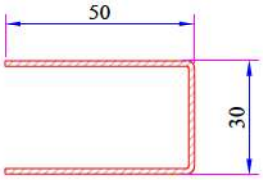

Door Sash - Outward Opening Door Sash Profile Reinforcement
34022-12013

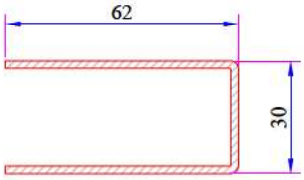

Super Door Sash Profile Reinforcement
34022-12029

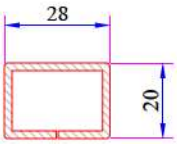

Lap Joint Profile Reinforcement
34022-12118

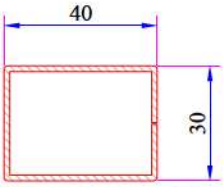

100mm Frame Lifting Profile Reinforcement
34022-12120

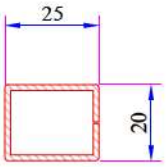

35mm Frame Lifting Profile Reinforcement
34022-12104

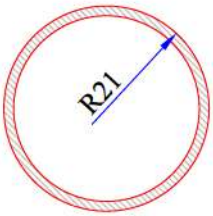

Pipe Profile Reinforcement
34022-12502

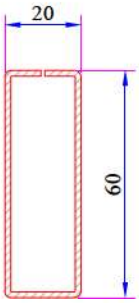

Large Coupling Profile Reinforcement
34022-12106

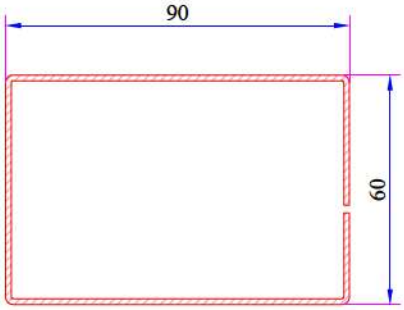

70x100 mm Box Profile Reinforcement
34022-12121

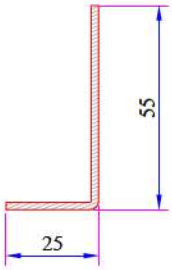

135° Corner Profile Reinforcement
34022-12303

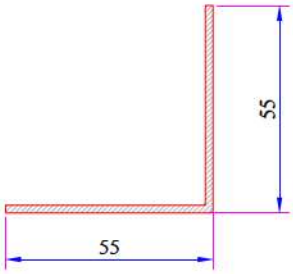

90° Corner Profile Reinforcement
34022-12305

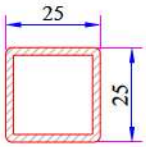

Mullion Profile Static Reinforcement
34022-12122

W 760 Installation

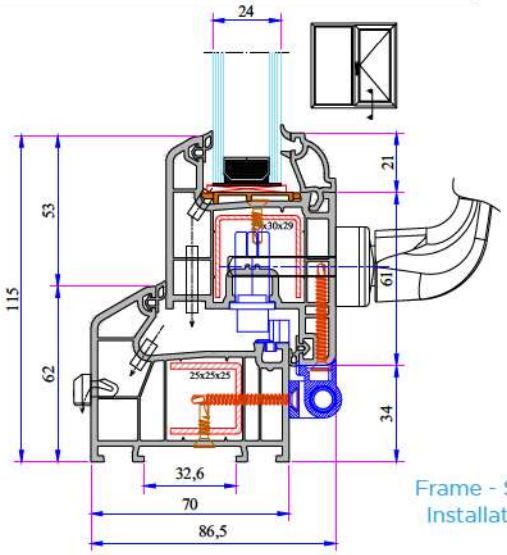

Frame - Sash Installation

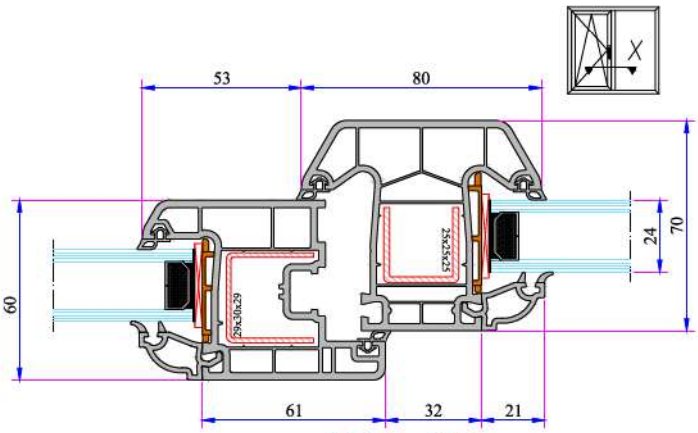

Mullion - Sash Installation

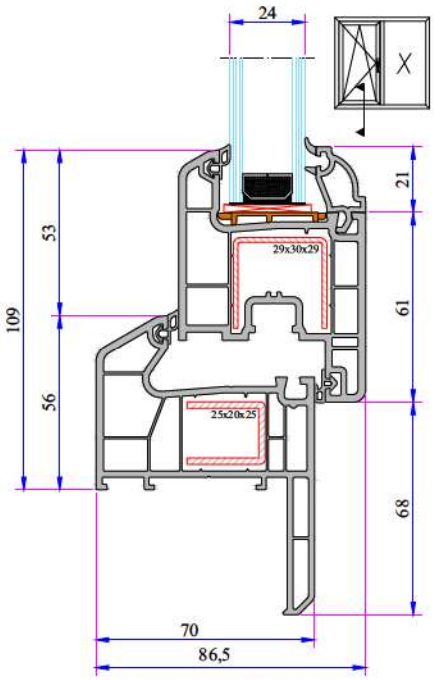

Frame with Sill - Sash Installation

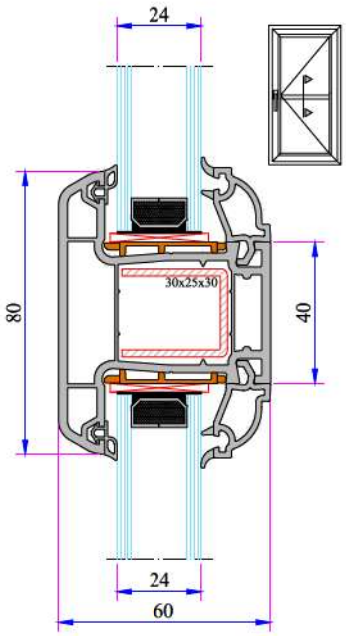

Mullion Profile Installation

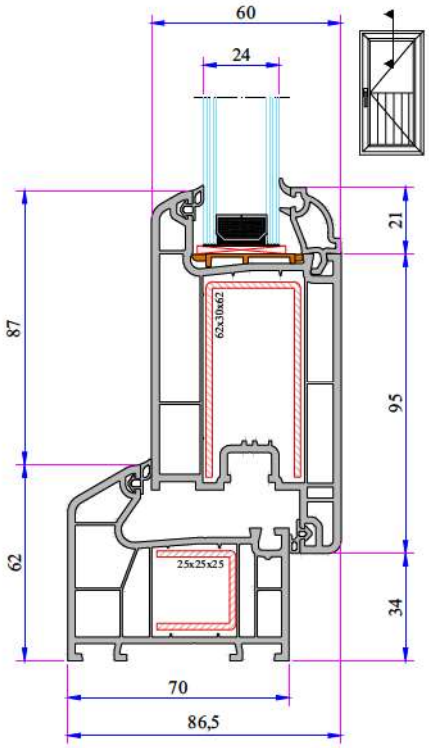

Frame - Super Door Sash Installation

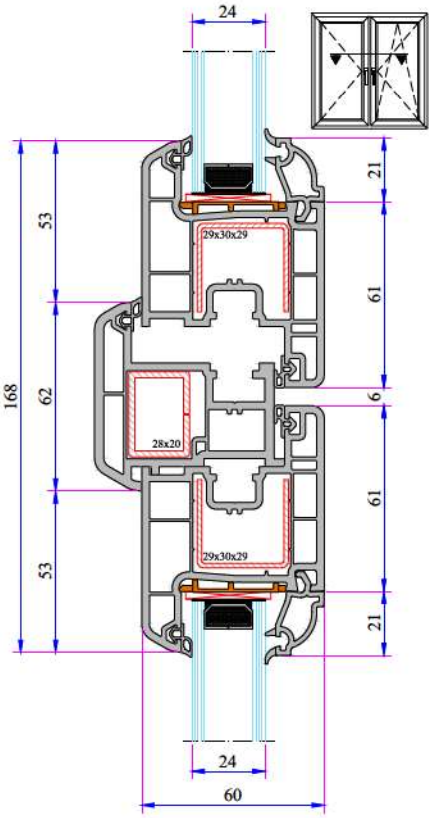

Sash - Lap Joint - Sash Installation

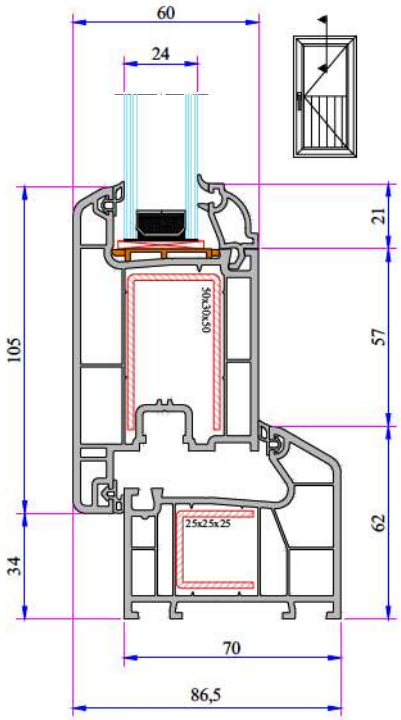

Frame - Outward Opening Door Sash Installation

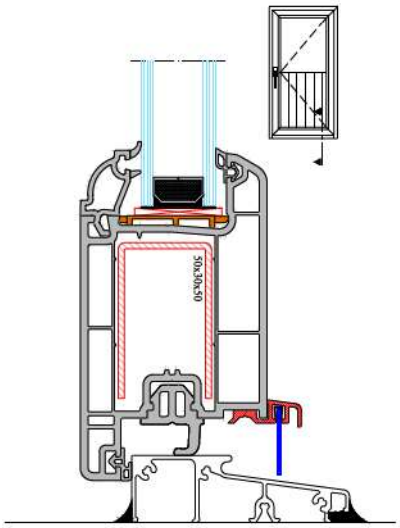

With Aluminium Threshold Frame Door Sash Installation

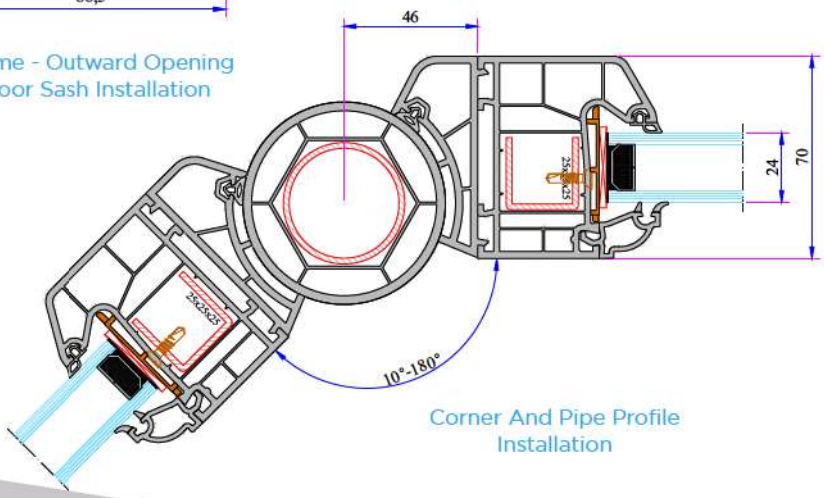

Corner And Pipe Profile Installation

W 760 SERIES
PVC PROFILE SYSTEM

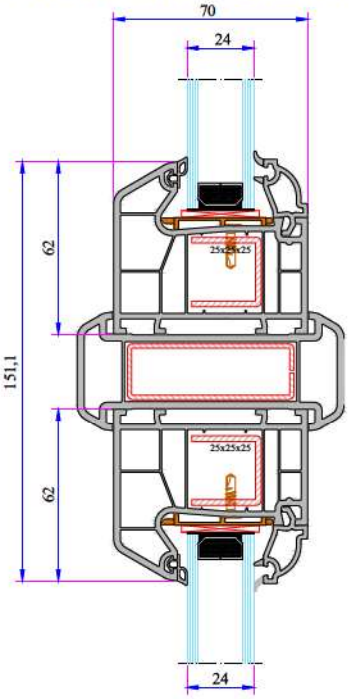

Large Coupling Profile Installation

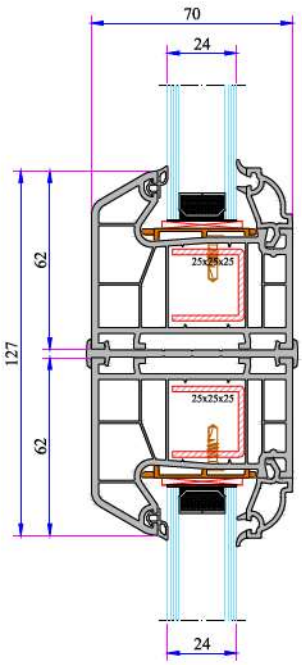

Narrow Coupling Profile Installation

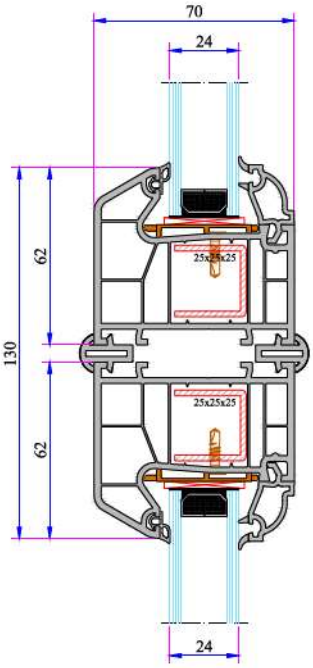

Short Coupling Profile Installation

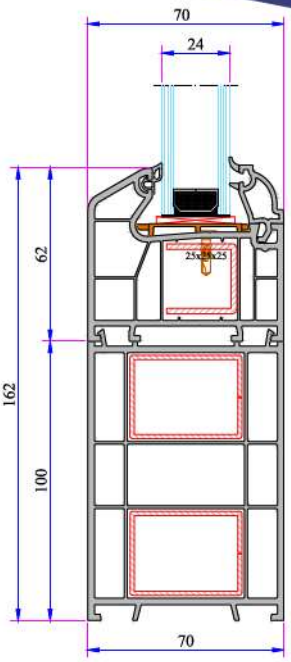

100mm Frame Lifting Profile Installation

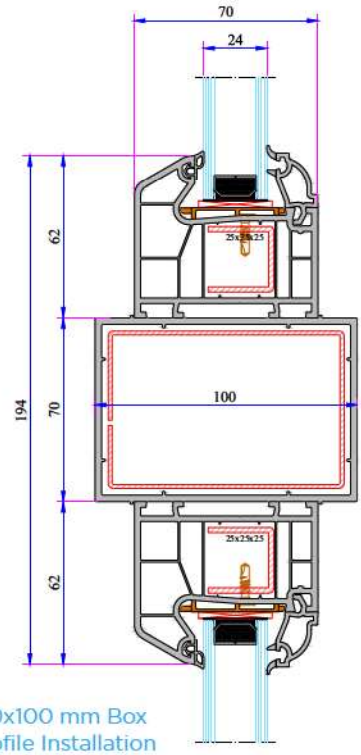

70x100 mm Box Profile Installation

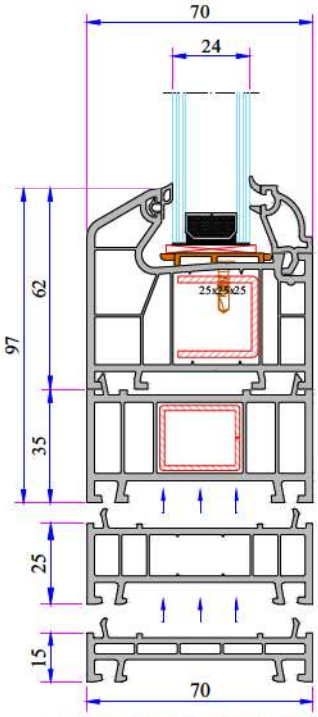

35mm Frame Lifting Profile Installation

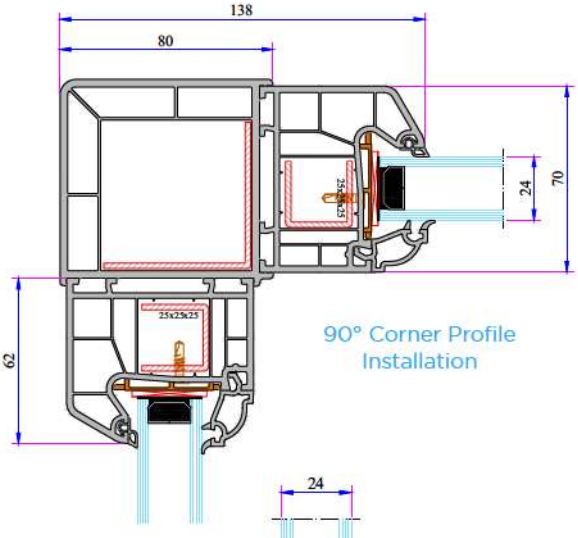

90° Corner Profile Installation

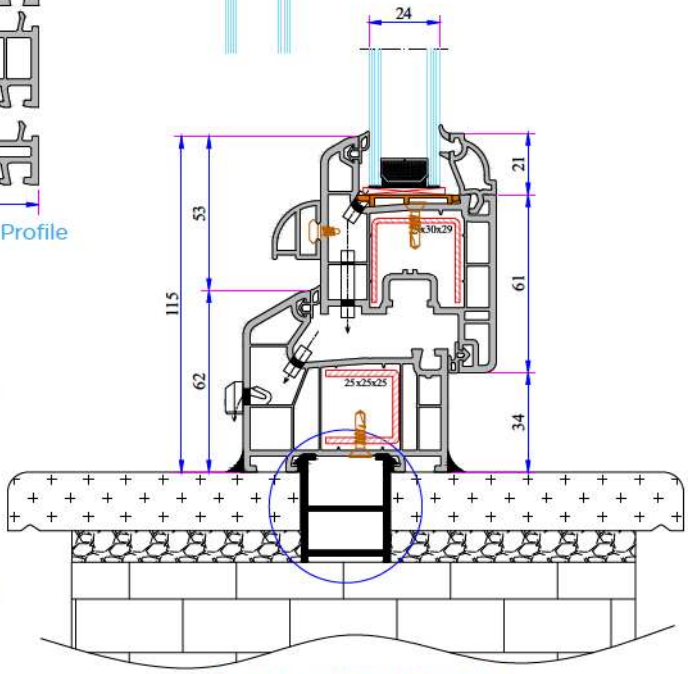

Offset Profile and Montage Profile Installation

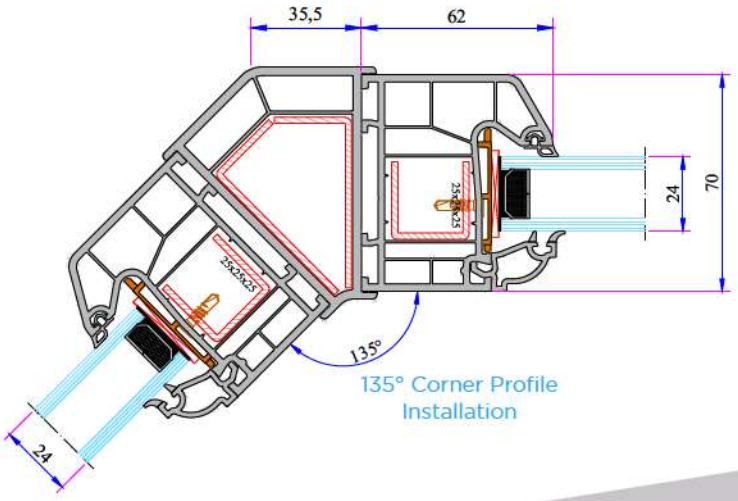

135° Corner Profile Installation

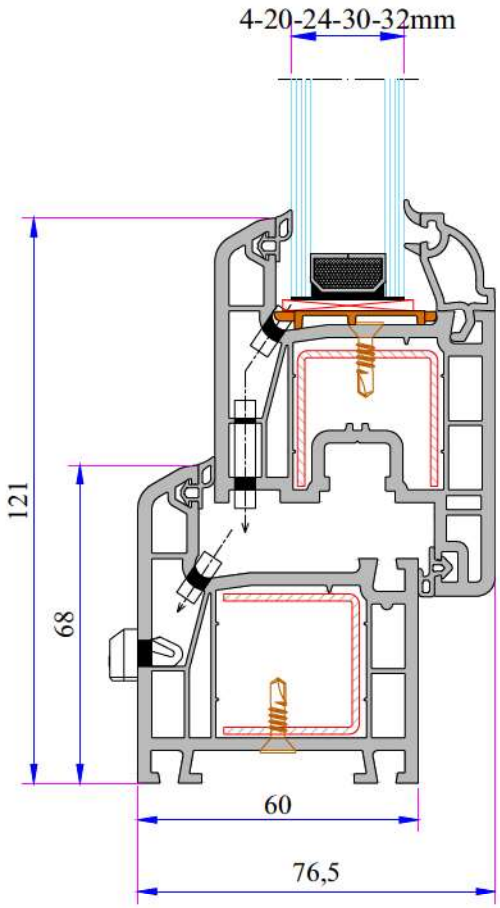

TECHNICAL

W 642 SERIES

Profile Width: 60 mm
Number of chambers: 4
Profile Class: A Class (TS EN 12608-1)
RAL 716 - GZ A Class
Seal Type: External / Internal double seal system
Seal Type and Color: TPE – Grey /Black
Glass Thickness (mm): 4, 20, 24, 30, 32 mm
The thermal insulation Uf: 1,50 W/m²K

W 640 SERIES

Profile Width: 60 mm
Number of chambers: 4
Profile Class: B Class (TS EN 12608-1)
Seal Type: External / Internal double seal system
Seal Type and Color: TPE – Grey /Black
Glass Thickness (mm): 4, 20, 24, 30, 32 mm
The thermal insulation Uf: 1,45 W/m²K

INSTRUCTION

· The main profiles have 60 mm width.

· Because of the elastic grey and black seal which does not leave any stain on profiles will be provided maximum air, water, dust and sound isolation.

· Due to the 4 chambers profiles, it has maximum performance for thermal, sound and water isolation.

· It is a series of profiles with very special design that provides maximum wind resistance on high rise buildings.

· Excluding normal sash profile there is also chance to have a choice for offset type sash profile.

· In addition to white profile a different laminated color range is available.

· 4-5 mm single glazing application of 20, 24, 30, 32 mm glazing beads give us alternatives of using double, triple glazing and panels.

W 642 - W 640 SERIES
PVC PROFILE SYSTEM

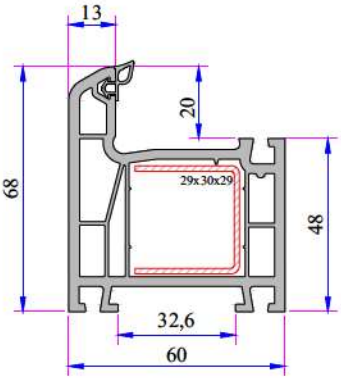

Frame Profile
642.1000 (A Class)
640.1000 (B Class)

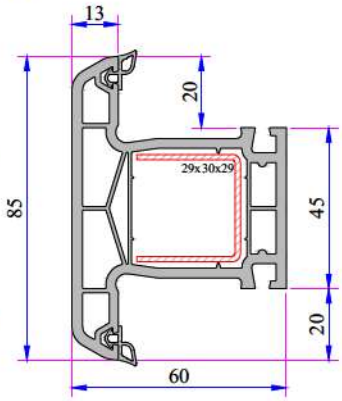

Mullion Profile
642.3000 (A Class)
640.3000 (B Class)

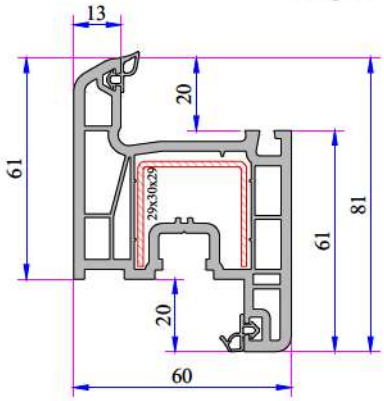

Sash Profile
642.2000 (A Class)
640.2000 (B Class)

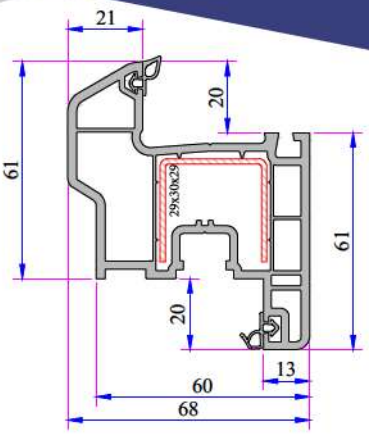

Offset Type Sash Profile
632.2200

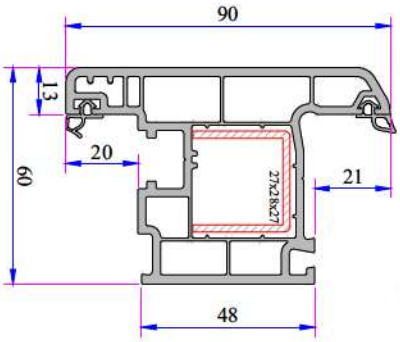

9 Axis Outward Opening
Mullion Profile
430.2001

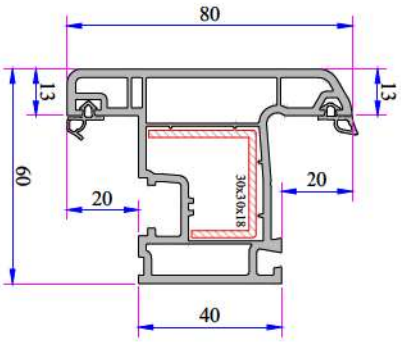

22 Axis Outward Opening
Sash Profile
632.2014

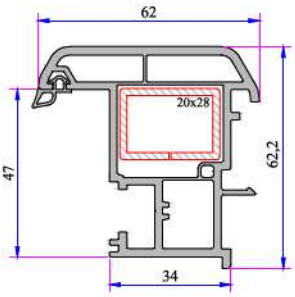

Lap Joint Profile
632.3104

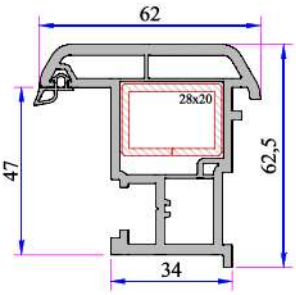

Lap Joint Profile
632.3100

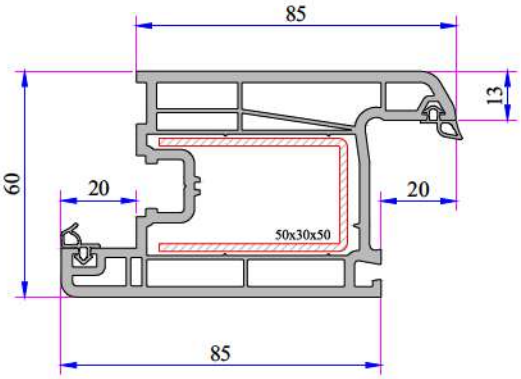

Door Sash Profile
642.2100

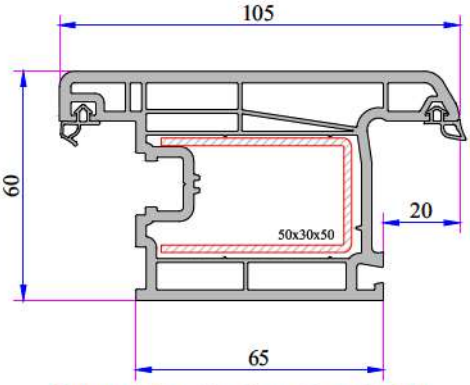

Outward Opening Door Sash Profile
642.2101

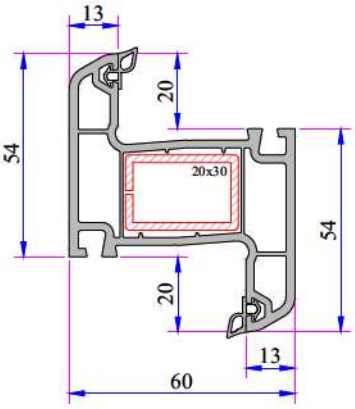

Outward Opening Mullion Profile
632.3005

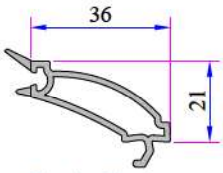

Single Glazing
Bead 4-6 mm
101.4002

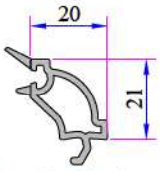

Double Glazing
Bead 20 mm
101.4102

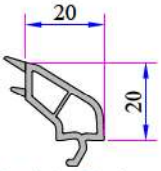

Double Glazing
Bead 20 mm
101.4100

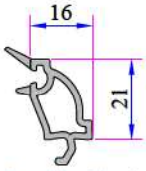

Double Glazing
Bead 24 mm
101.4202

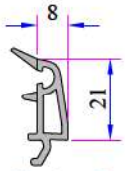

Triple Glazing Bead 32 mm
101.4500

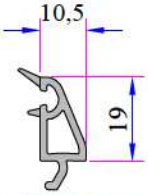

Triple Glazing
Bead 30 mm
332.4100

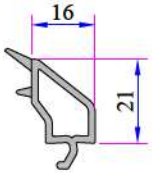

Double Glazing
Bead 24 mm
750.4500

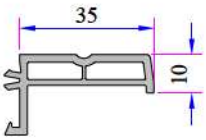

Frame Sill Profile
(35mm)
099.5523

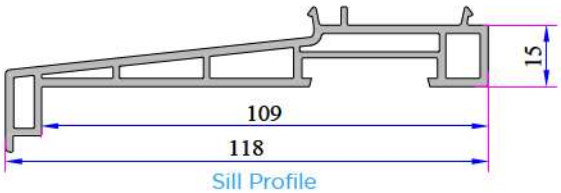

Sill Profile
058.5504

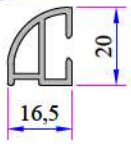

Offset Profile
900.6307

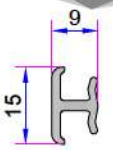

Universal Short Coupling Profile
099.5004

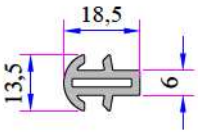

Short Coupling Profile
099.5003

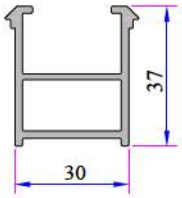

Frame Montage Profile
060.5301 0

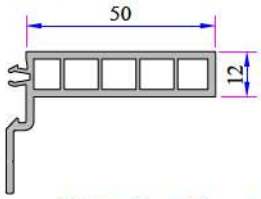

Frame Sill Profile (50mm)
099.5524

Universal Large Coupling Cover Profile
058.5707

Narrow Coupling Profile
060.5001

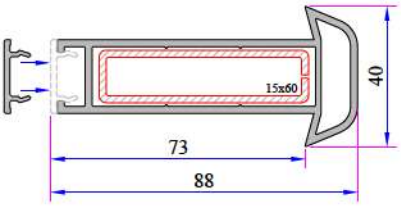

Universal Large Coupling Profile
058.5000

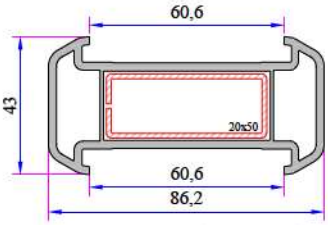

Large Coupling Profile
060.5000

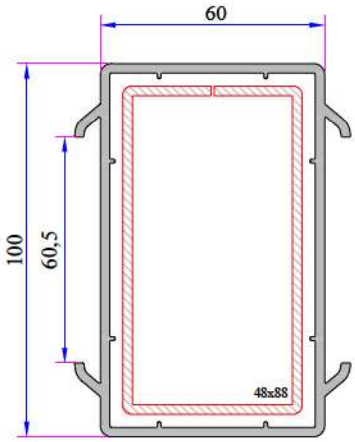

60x100 Spiked Box Profile
060.5203

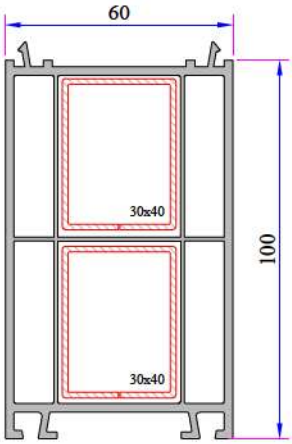

60x100 Frame Lifting Profile
900.5303

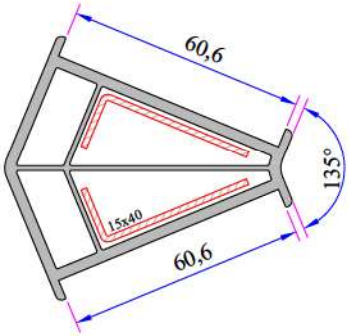

135° Corner Profile
060.5102

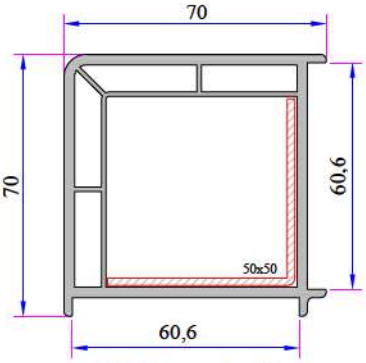

90° Corner Profile
060.5100

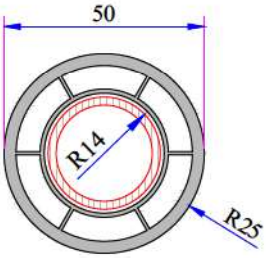

Pipe Profile

050.5106

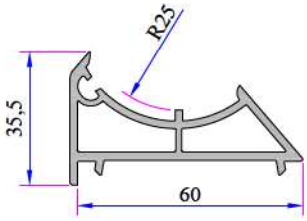

Angle Pipe Adaptor Profile
060.5104

W 640 - W 642 Re-Inforcement Profiles

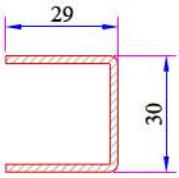

Frame - Sash - Offset Type Sash - Mullion Profile Reinforcement
34022-12002

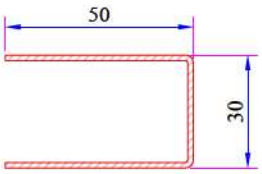

Door Sash-Outward Opening Door Sash Profile Reinforcement
34022-12013

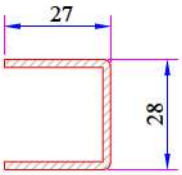

Outward Opening Sash Profile (9 Axis) Reinforcement
34022-12020

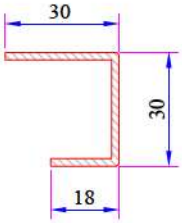

Outward Opening Sash Profile (22 Axis) Reinforcement
34022-12022

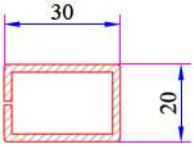

Outward Opening Mullion Profile Reinforcement
34022-12109

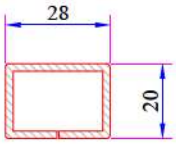

Lap Joint Profile Reinforcement
34022-12118

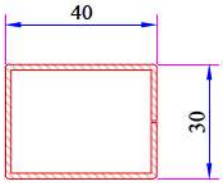

100mm Frame Lifting Profile Reinforcement
34022-12120

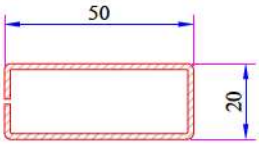

Large Coupling Profile Reinforcement
34022-12105

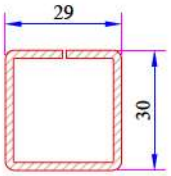

Mullion Profile Static Reinforcement
34022-15129

W 642 - W 640 SERIES
PVC PROFILE SYSTEM

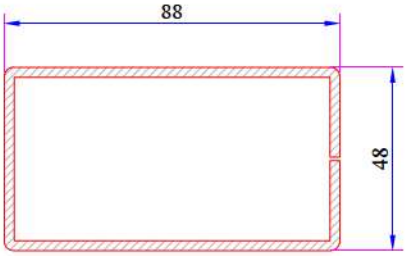

60x100 mm Box Profile Reinforcement
34022-12102

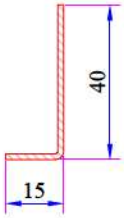

135°Corner Profile Reinforcement
34022-12301

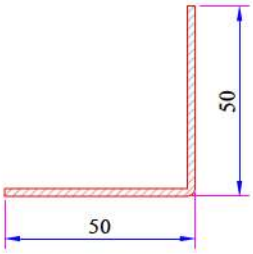

90° Corner Profile Reinforcement
34022-12302

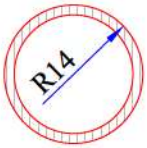

Pipe Profile Reinforcement
34022-12503

W 640 - W 642 Installation

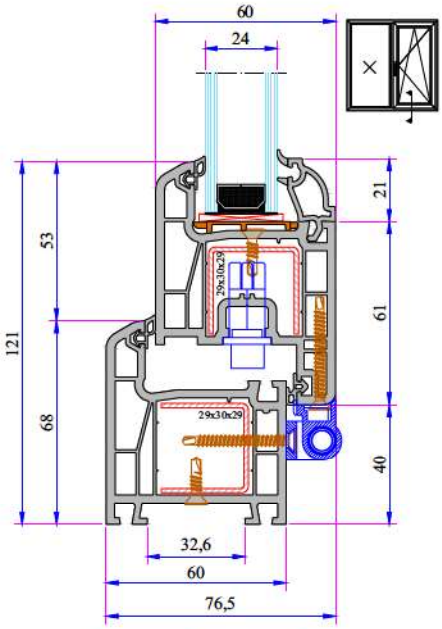

Frame - Sash Installation

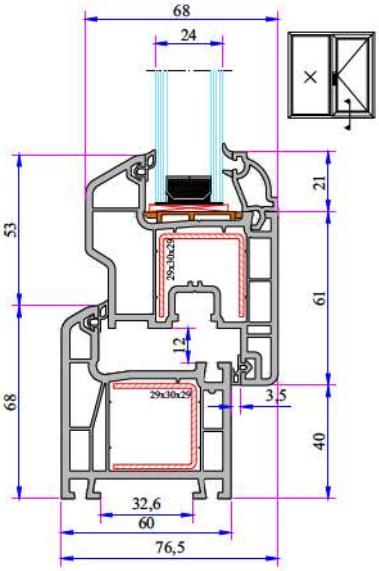

Frame - Offset Type Sash Installation

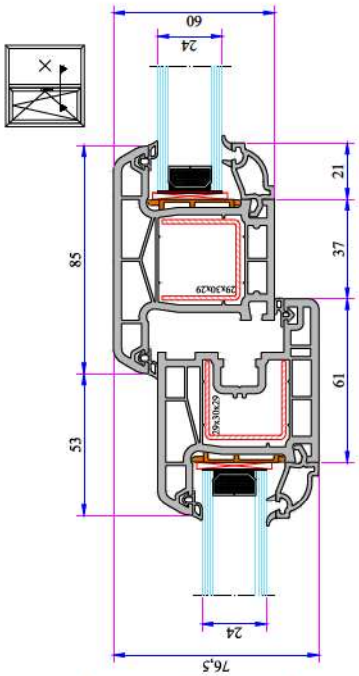

Sash - Mullion Installation

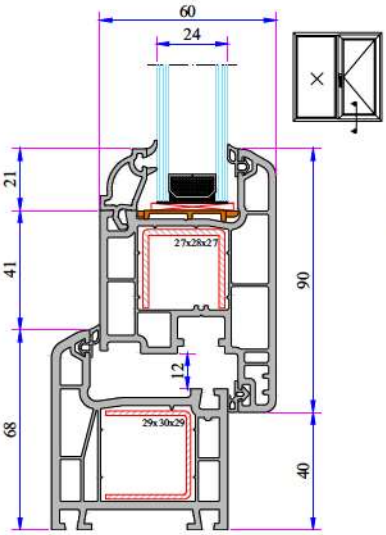

Frame - Outward Opening Sash Installation

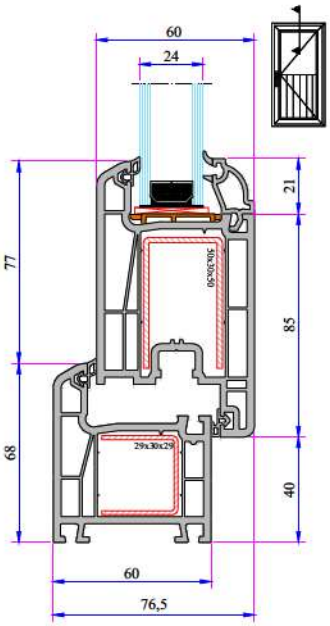

Frame - Door Sash Installation

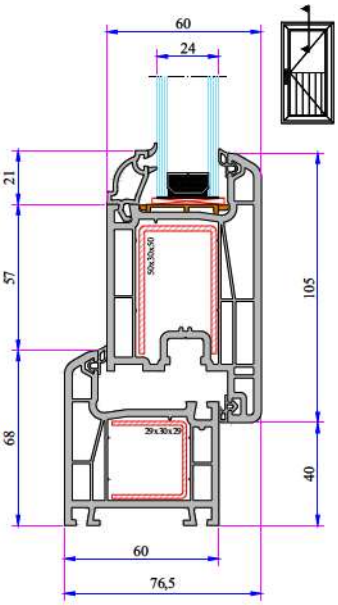

Frame - Outward Opening Door Sash Profile

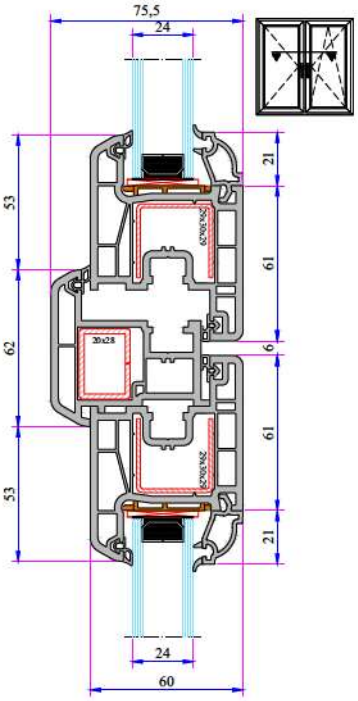

Sash - Lap Joint - Sash Installation

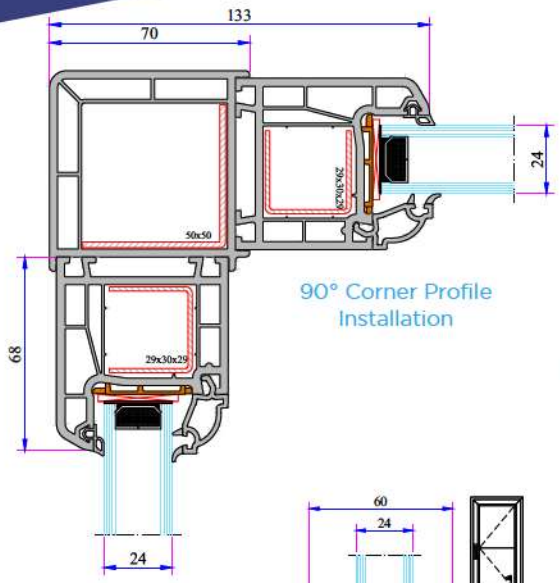

90° Corner Profile Installation

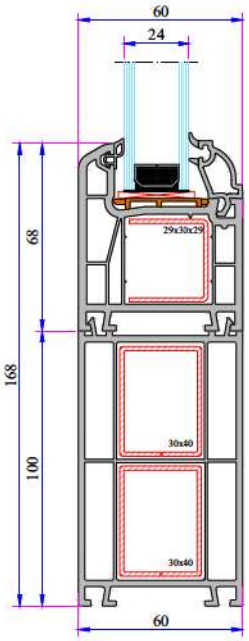

100mm Frame Lifting Profile Installation

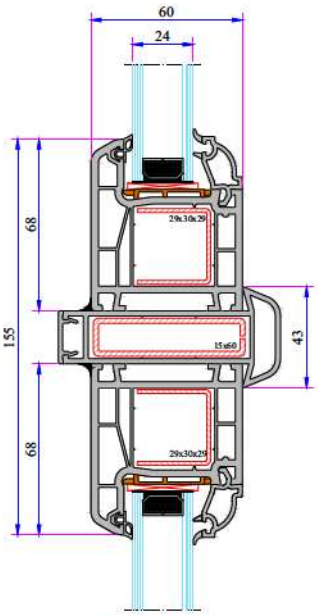

Large Coupling Installation

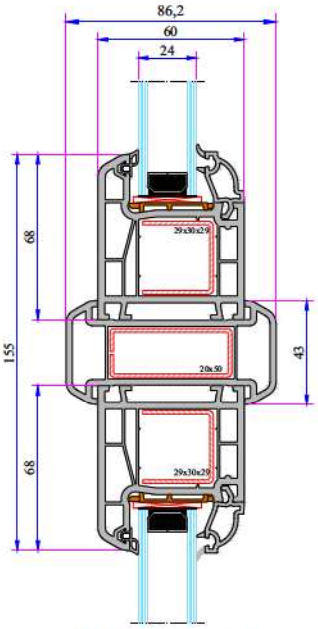

Large Coupling Installation

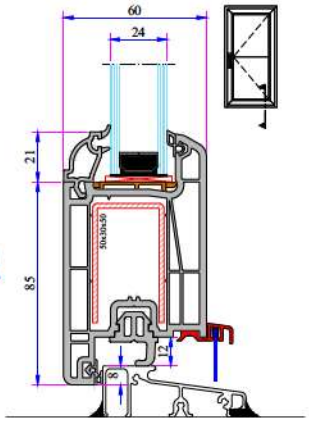

With Aluminium Threshold Frame Door Sash Installation

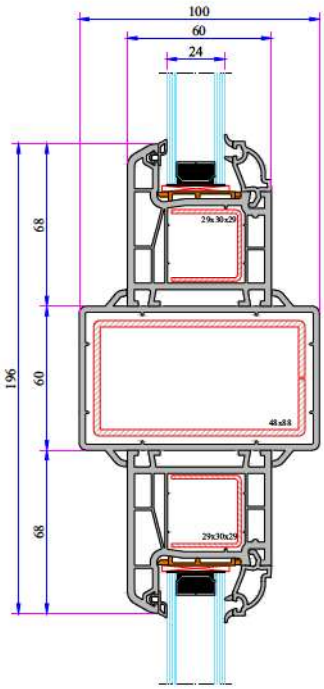

60x100 Spiked Box Profile Installation

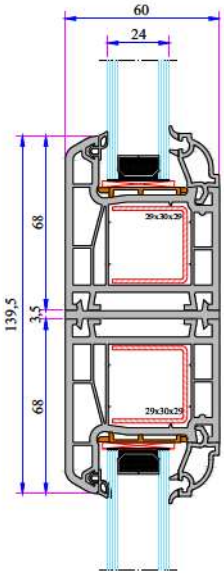

Narrow Coupling Profile Installation

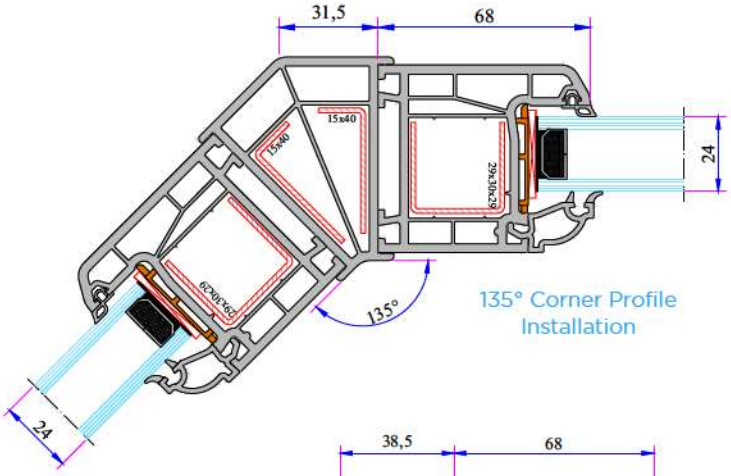

135° Corner Profile Installation

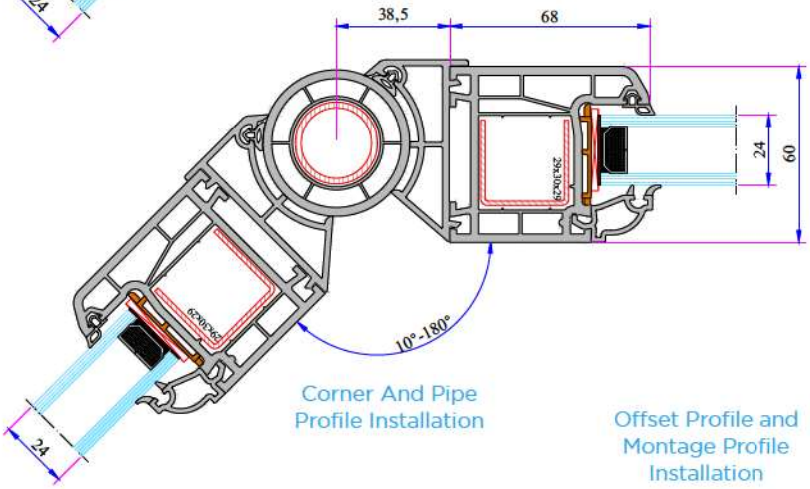

Corner And Pipe Profile Installation

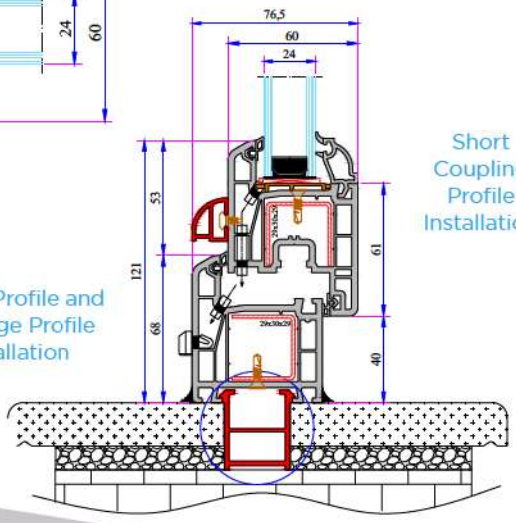

Offset Profile and Montage Profile Installation

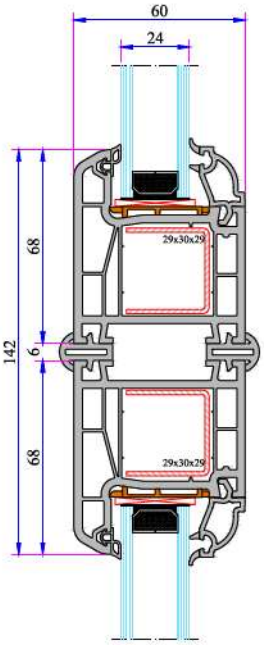

Short Coupling Profile Installation

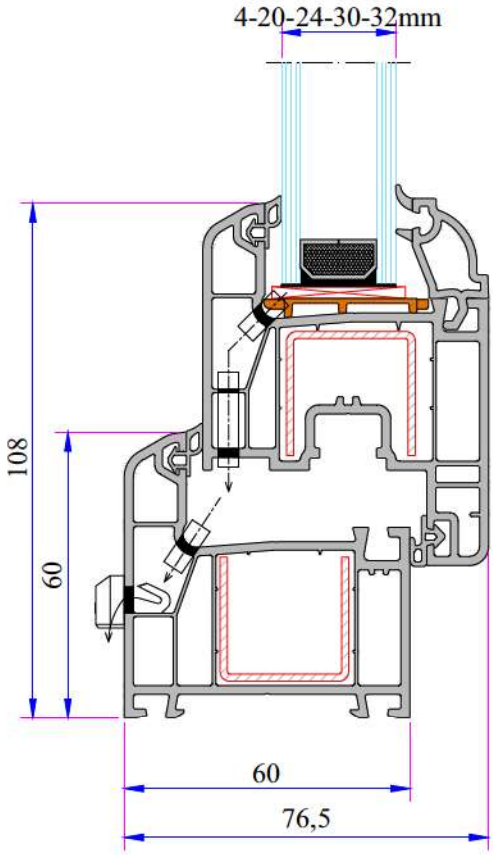

TECHNICAL

W 634 SERIES

Profile Width: 60 mm

Number of chambers: 4

Profile Class: C Class

Seal Type: External / Internal double seal system

Seal Type and Color: TPE – Grey /Black

Glass Thickness (mm): 4, 20, 24, 30, 32 mm

The thermal insulation Uf: 1,50 W/m²K

INSTRUCTION

· The main profiles have 60 mm width.

· Because of the elastic grey and black seal which does not leave any stain on profiles will be provided maximum air, water, dust and sound isolation.

· Due to the 4 chambers profiles, it has maximum performance for thermal, sound and water isolation.

· Excluding normal sash profile there is also chance to have a choice for offset type sash profile.

· In addition to white profile a different laminated color range is available.

· 4-6 mm single glazing application of 20, 24, 30, 32 mm glazing beads give us alternatives of using double, triple glazing and panels.

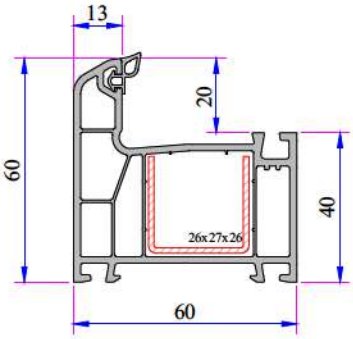

Frame Profile
634.1000

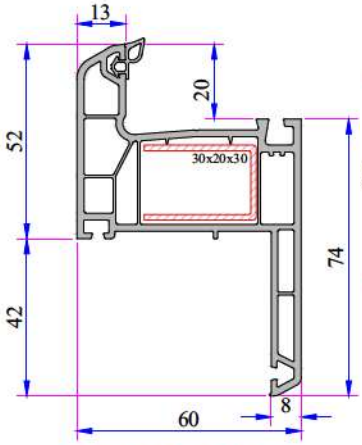

Dec. Sill Profile 42mm
634.1200
634.1200.PC (with Double Seal)

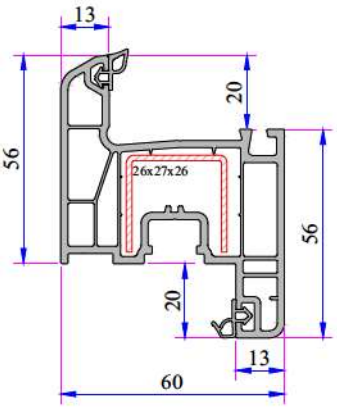

Sash Profile
634.2000

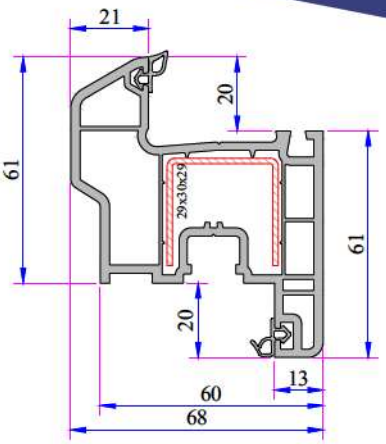

Offset Type Sash Profile
632.2200

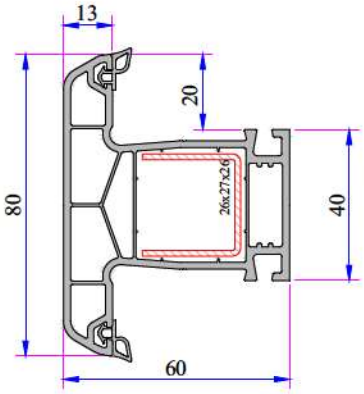

Mullion Profile
634.3000

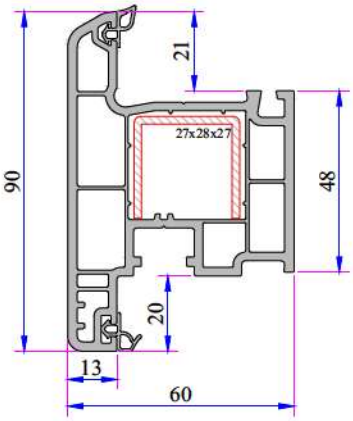

9 Axis Outward Opening
Sash Profile
430.2001

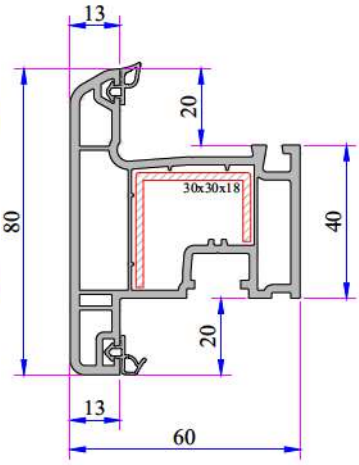

22 Axis Outward Opening
Sash Profile
632.2014

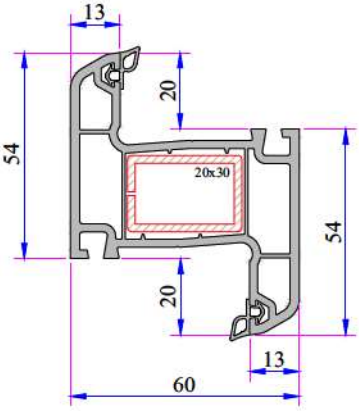

Outward Opening Mullion
Profile
632.3005

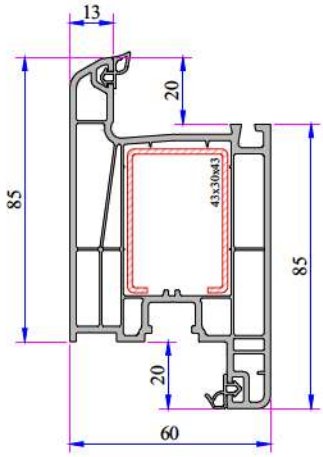

Door Sash Profile
634.2100

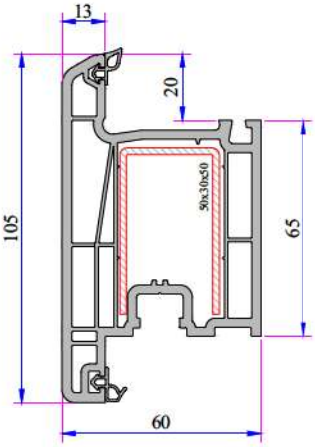

Outward Opening Door Sash
Profile
642.2101

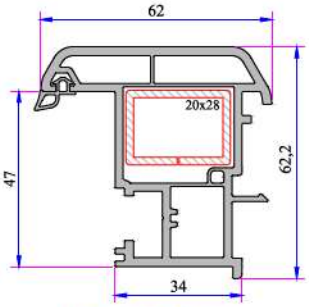

Lap Joint Profile
632.3104

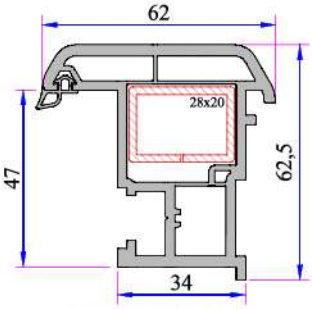

Lap Joint Profile
632.3100

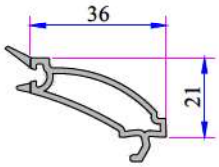

4 mm Glazing Bead
101.4002

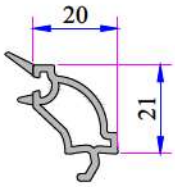

20mm Decorative
Glazing Bead
101.4102

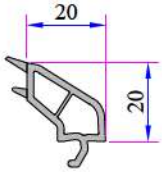

20mm Glazing Bead
101.4100

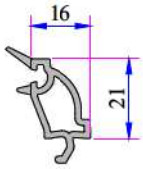

24mm Decorative
Glazing Bead
101.4202

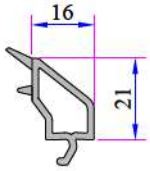

24mm Decorative
Glazing Bead
750.4500

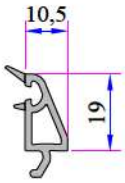

30mm Decorative
Glazing Bead
332.4100

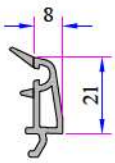

32mm Glazing Bead
101.4500

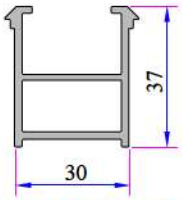

Frame Montage Profile
060.5301

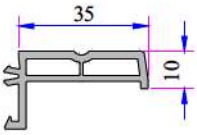

Sill Profile (35mm)
099.5523

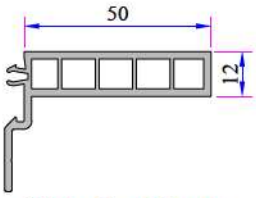

Sill Profile (50mm)
099.5524

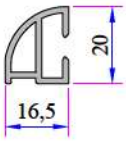

Offset Profile
900.6307

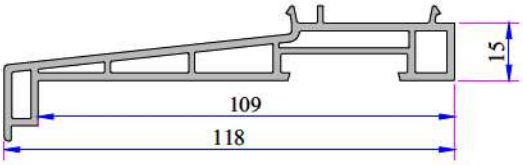

Sill Profile
058.5504

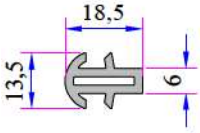

Short Coupling Profile
099.5003

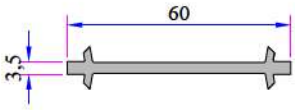

Narrow Coupling Profile
060.5001

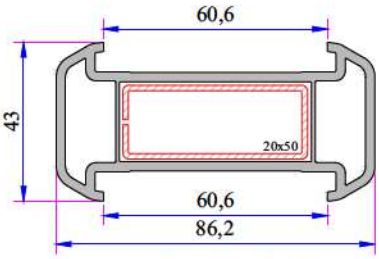

Large Coupling Profile
060.5000

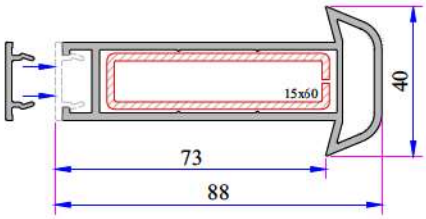

Universal Large Coupling Profile
058.5000

Universal Large Coupling Profile
058.5707

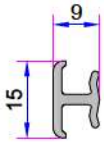

Universal Short Coupling Profile
099.5004

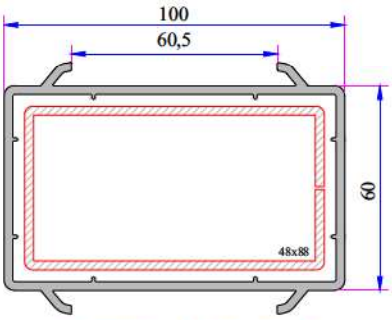

60x100 Spiked Box Profile
060.5203

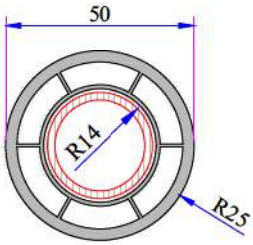

Pipe Profile
050.5106

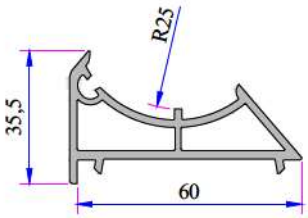

Angle Pipe Adaptor Profile
060.5104

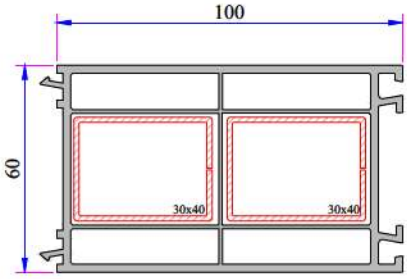

60x100 Frame Lifting Profile
900.5303

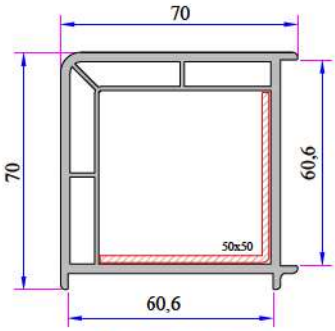

90° Corner Profile
060.5100

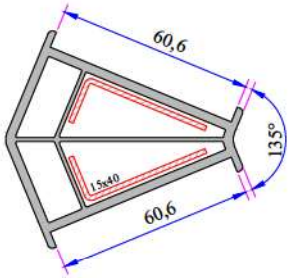

135° Corner Profile
060.5102

W 634 Re-Inforcement Profiles

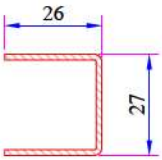

Frame, Sash, Mullion Profile Reinforcement
34022-12046

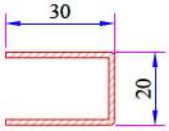

Frame With Sill Profile Reinforcement
34022-12006

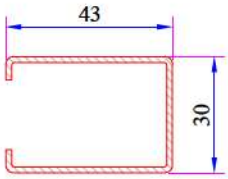

Door Sash Profile Reinforcement
34022-12023

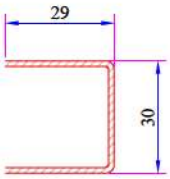

Offset Type Sash Profile Reinforcement
34022-12002

W 634 SERIES
PVC PROFILE SYSTEM

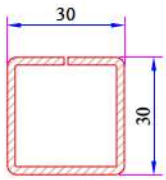

Frame - Mullion Static Reinforcement
34022-15129

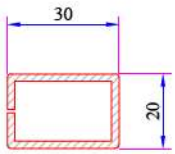

Outward Opening Mullion Profile Reinforcement
34022-12109

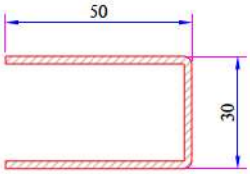

Door Sash - Outward Opening Door Sash Profile Reinforcement
34022-12013

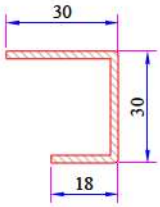

Outward Opening Sash (9 Axis) Reinforcement
34022-12022

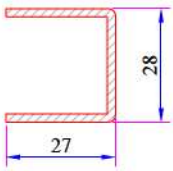

Outward Opening Sash Profile Reinforcement
34022-12020

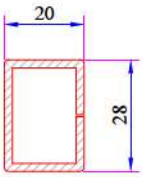

Lap Joint Profile Reinforcement
34022-12118

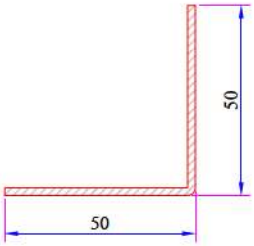

Corner Profile 90° Reinforcement
34022-12302

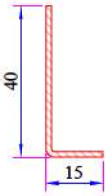

Corner Profile 135° Reinforcement
34022-12301

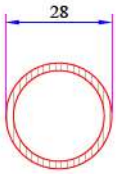

Pipe Profile Reinforcement
34022-12503

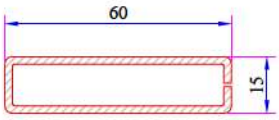

Universal Large Coupling Profile Reinforcement
34022-12123

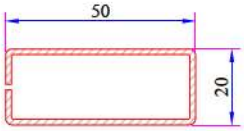

Large Coupling Profile Reinforcement
34022-12105

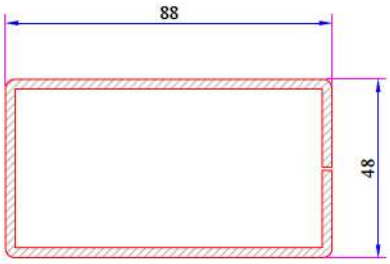

60x100 Spiked Box Profile Reinforcement
34022-12102

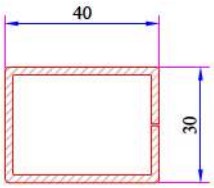

60x100 Frame Lifting Profile Reinforcement
34022-12120

W 634 Installation

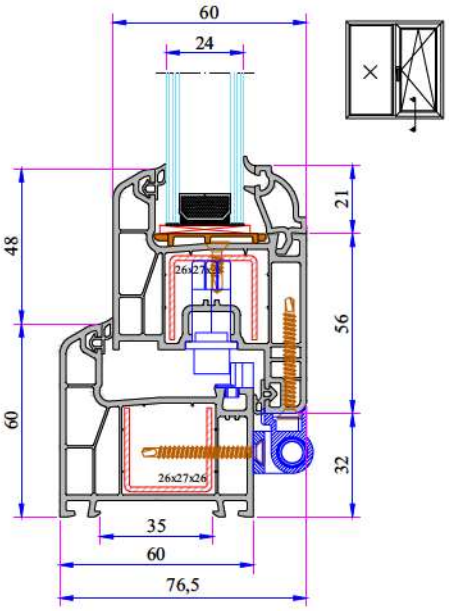

Frame - Sash Installation

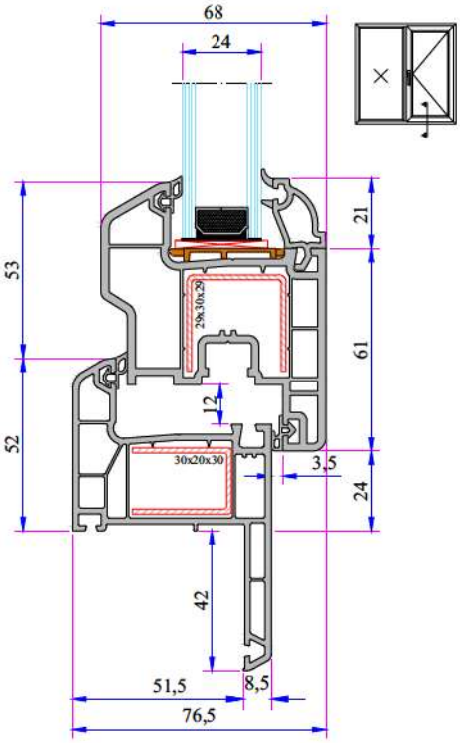

Frame - Offset Type Sash Installation

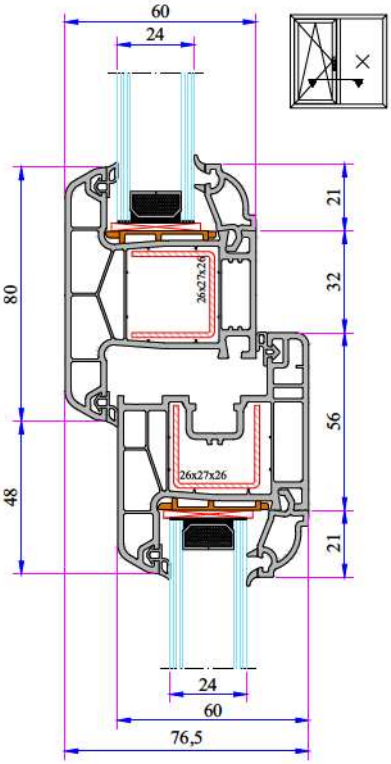

Sash - Mullion Installation

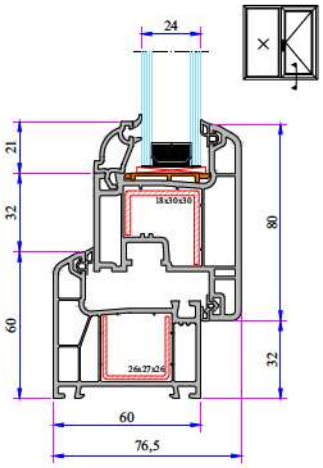

Frame - Outward Opening Sash Installation

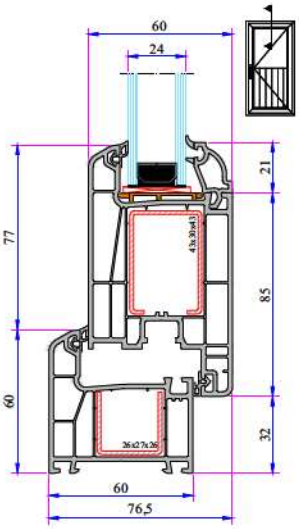

Frame - Door Sash Installation

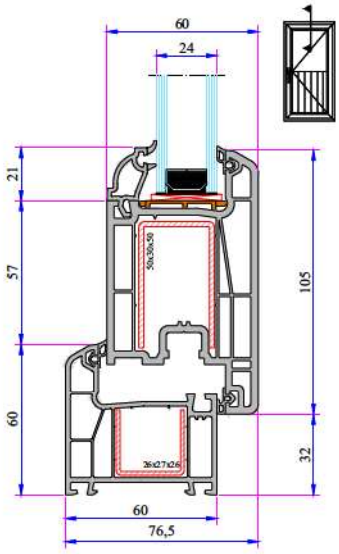

Frame - Outward Opening Door Sash Installation

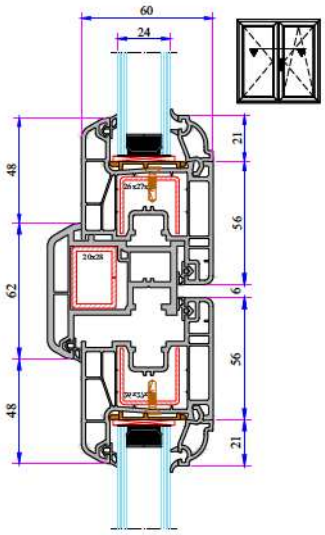

Sash - Lap Joint - Sash Installation

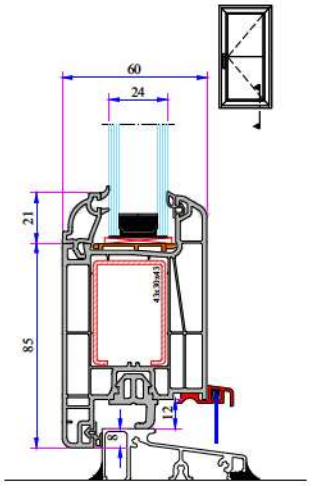

Aluminium Threshold - Door Sash Installation

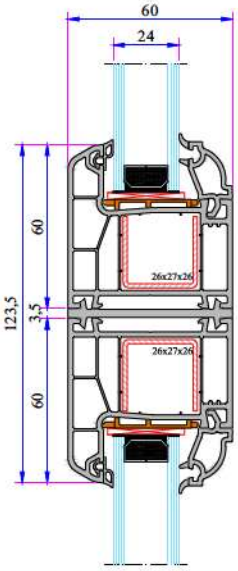

Narrow Coupling Profile Installation

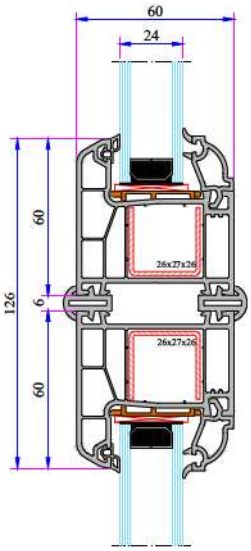

Short Coupling Profile Installation

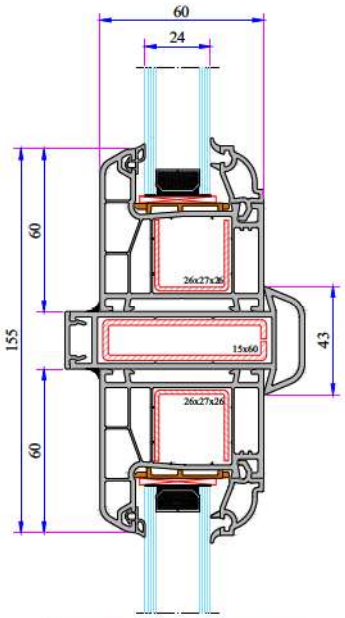

Universal Large Coupling Profile Installation

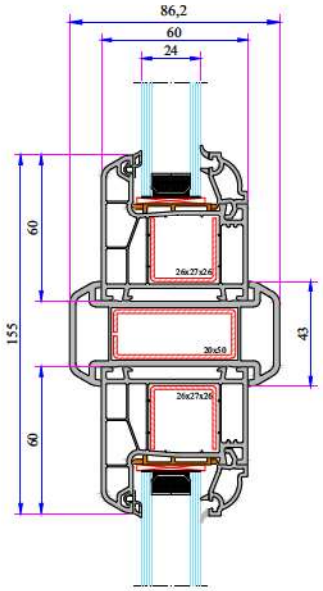

Large Coupling Profile Installation

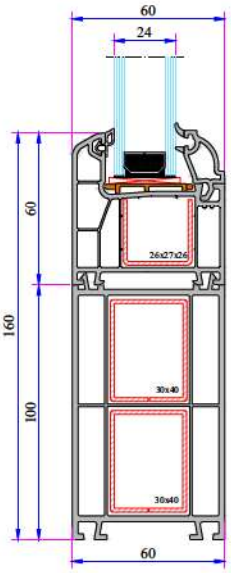

100mm Frame Lifting Profile Installation

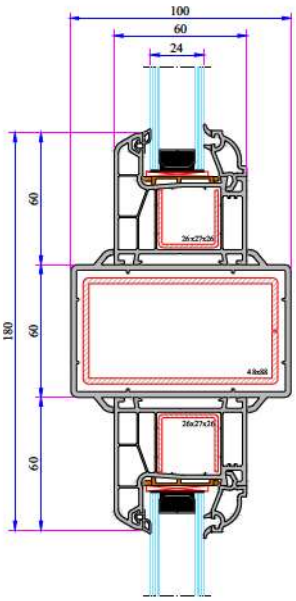

60x100 Spiked Box Profile Installation

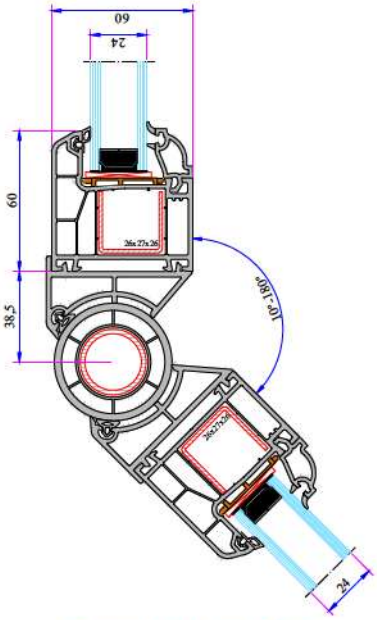

Corner And Pipe Profile Installation

W 634 SERIES
PVC PROFILE SYSTEM

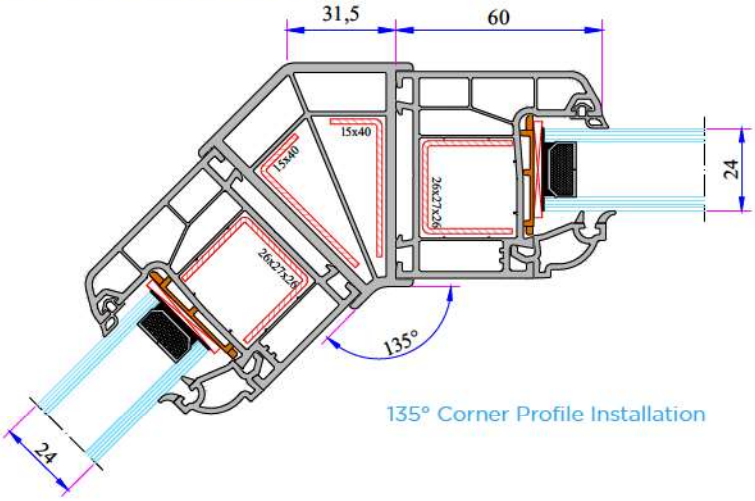

135° Corner Profile Installation

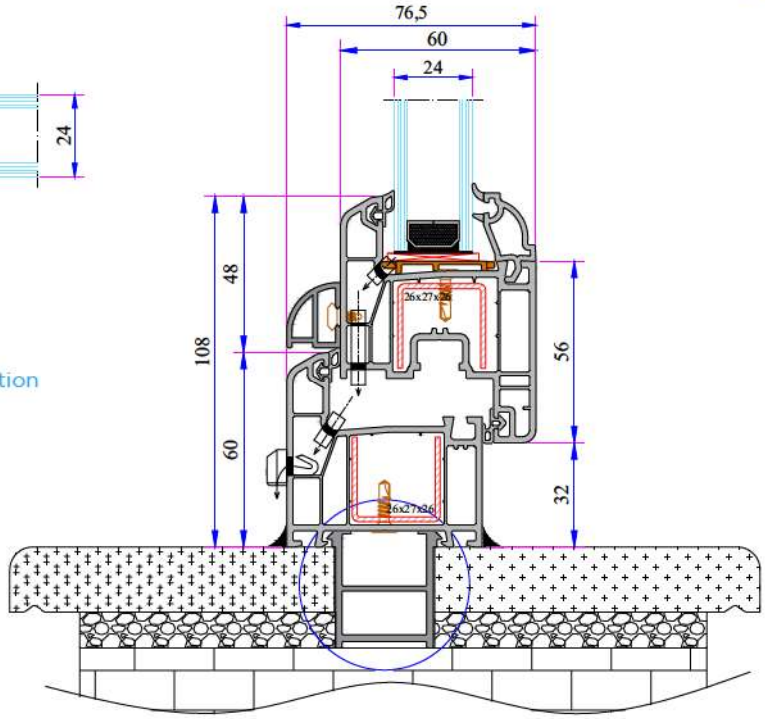

Offset Profile and Frame
Montage Profile Installation

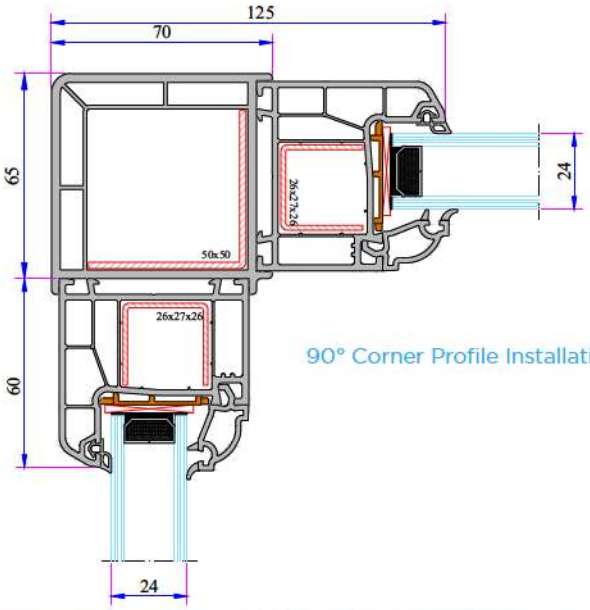

90° Corner Profile Installation

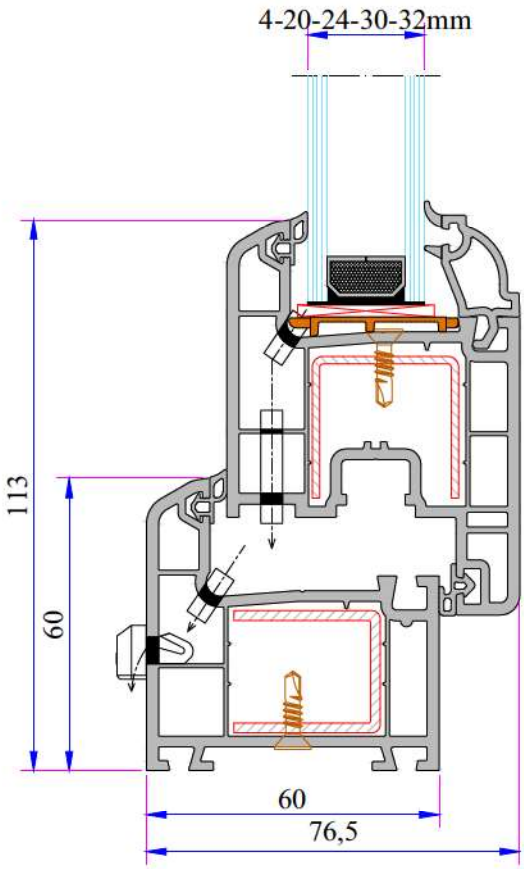

TECHNICAL

W 630 - W 632 SERIES

Profile Width: 60 mm

Number of chambers: 3

Profile Class: W 632 B Class (TS EN 12608-1), W 630 C Class (TS EN 12608-1)

Seal Type: External / Internal double seal system

Seal Type and Color: TPE – Grey /Black

Glass Thickness (mm): 4, 20, 24, 30, 32 mm

The thermal insulation Uf: 1,58 W/m²K

INSTRUCTION

· The main profile has 60 mm width.

· Because of the elastic grey and black seal which does not leave any stain on profiles will be provided maximum air, water, dust and sound isolation.

· Due to the 3 chambers profiles, it has maximum performance for thermal, sound and water isolation.

· It is a series of profiles with very special design that provides maximum wind resistance on high rise buildings.

· Excluding normal sash profile there is also chance to have a choice for offset type sash profile.

· In addition to white profile a different laminated color range is available.

· 4-5 mm single glazing application of 20, 24, 30, 32 mm glazing beads give us alternatives of using double, triple glazing and panels.

· It provides the visual integrity in the inner surface and the frame-wall connections due to integrated frame with sill profile.

W 630 - W 632 SERIES
PVC PROFILE SYSTEM

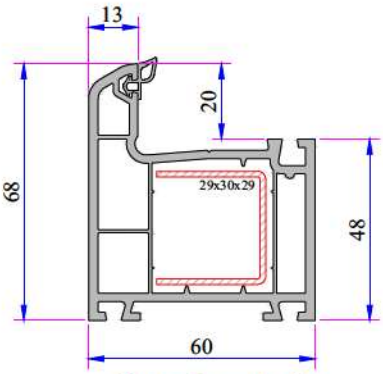

Super Frame Profile
632.1001

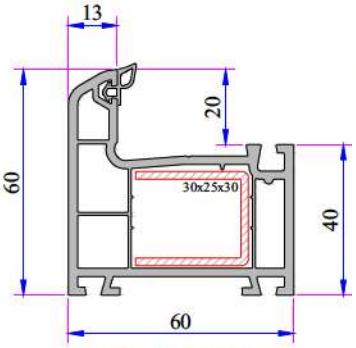

Frame Profile
632.1000

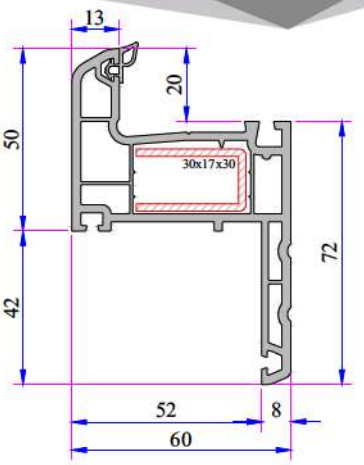

Frame with Dec.Sill 42 mm
632.1200
632.1200.PC (with Double Seal)

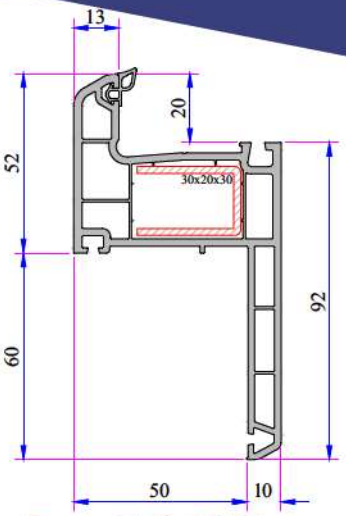

Frame with Flat Sill 60 mm
632.1207
632.1207.2.PC (with Double Seal)

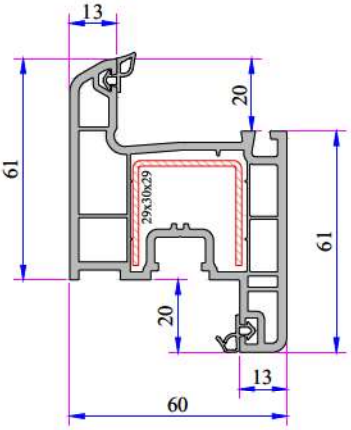

Sash Profile
632.2000

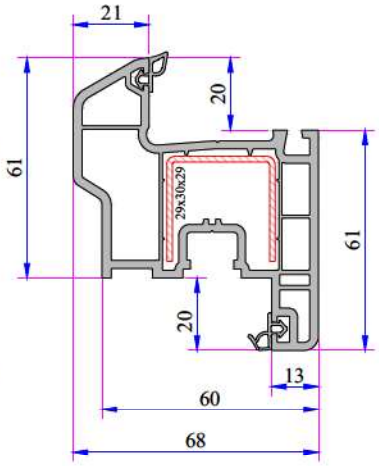

Offset Type Sash Profile
632.2200

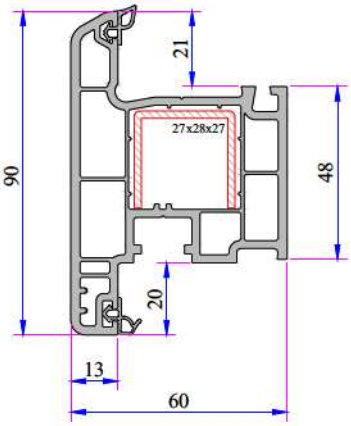

9 Axis Outward Opening
Sash Profile
430.2001

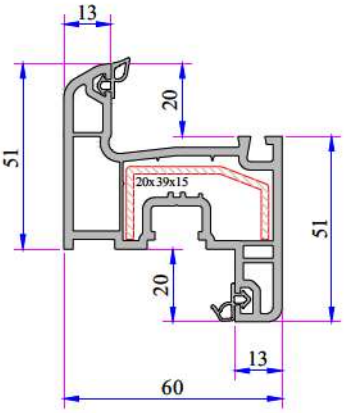

Eco Sash Profile
900.2005

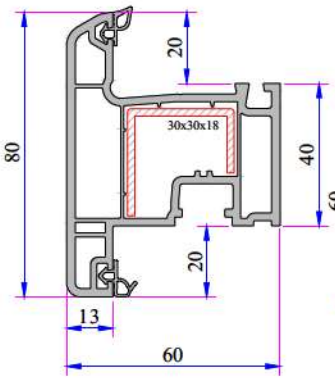

22 Axis Outward Opening
Sash Profile
632.2014

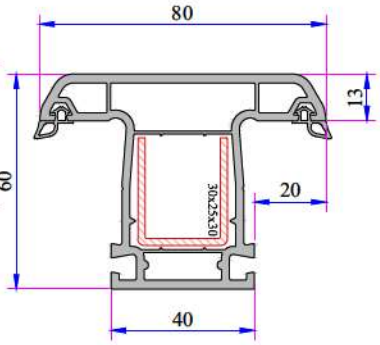

Mullion Profile
632.3000

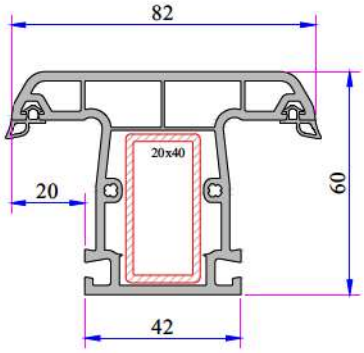

Static Mullion Profile
900.3003

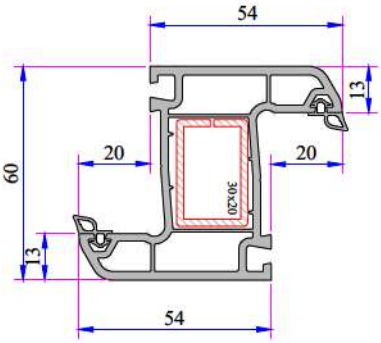

Outward Opening Mullion Profile
632.3005

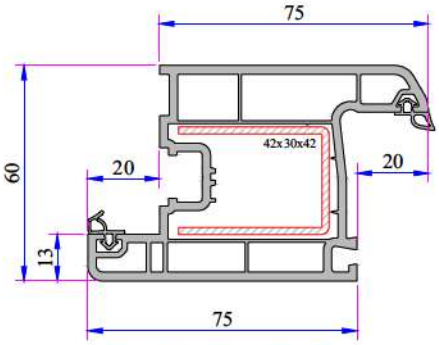

Eco Door Sash Profile
900.2107

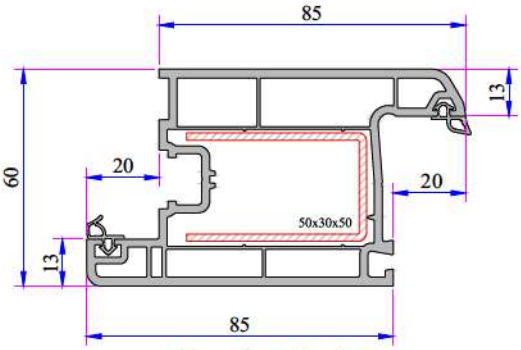

Door Sash Profile
632.2100

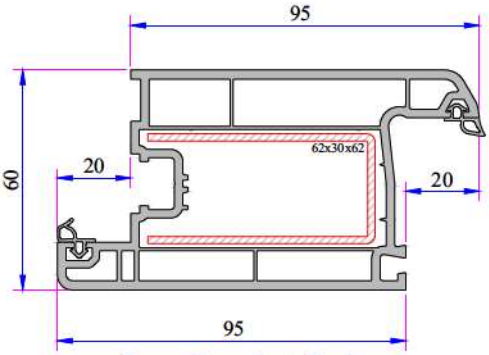

Super Door Sash Profile
900.2100

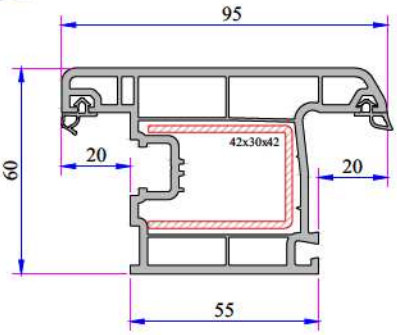

Outward Opening Eco Door Sash Profile
632.2108

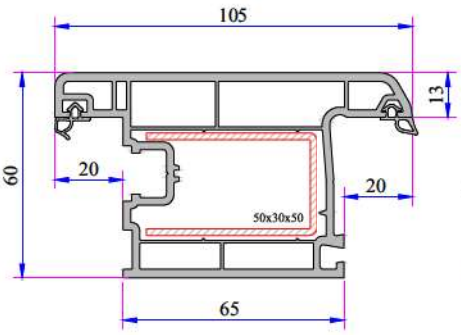

Outward Opening Door Sash Profile
632.2101

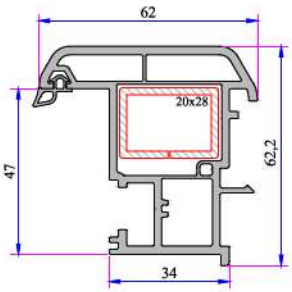

Lap Joint Profile
632.3104

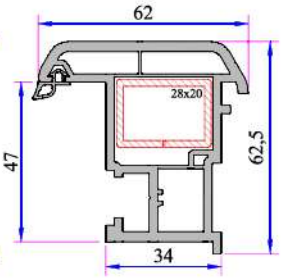

Lap Joint Profile
632.3100

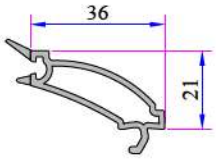

Single Glazing Bead 4-6 mm
101.4002

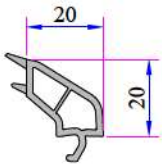

Double Glazing Bead 20 mm
101.4100

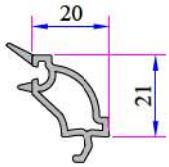

Double Glazing Bead 20 mm
101.4102

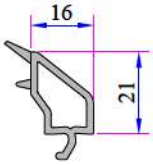

Double Glazing Bead 24 mm
750.4500

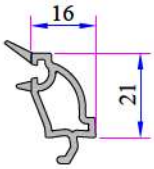

Double Glazing Bead 24 mm
101.4202

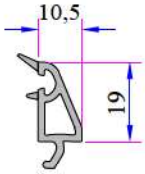

Double Glazing Bead 30 mm
332.4100

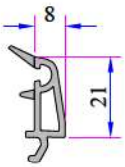

Double Glazing Bead 32 mm
101.4500

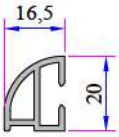

Offset Profile
900.6307

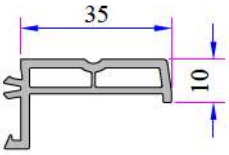

Frame Sill Profile (35mm)
099.5523

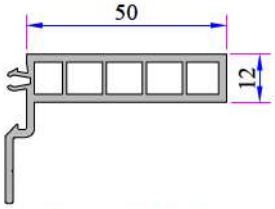

Frame Sill Profile (50mm)
099.5524

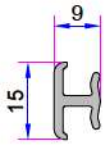

Universal Short Coupling Profile
099.5004

Universal Large Coupling Profile Cover
058.5707

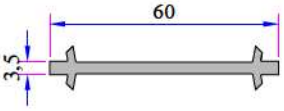

Narrow Couple Profile
060.5001

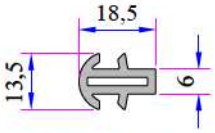

Short Coupling Profile
099.5003

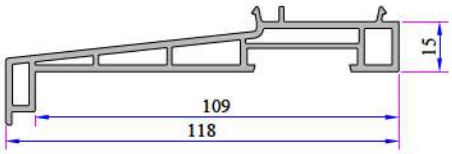

Sill Profile
058.5504

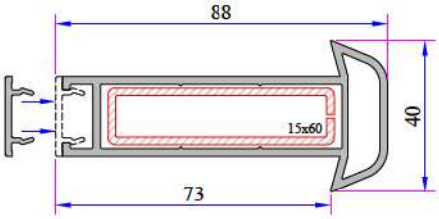

Universal Large Coupling Profile
058.5000

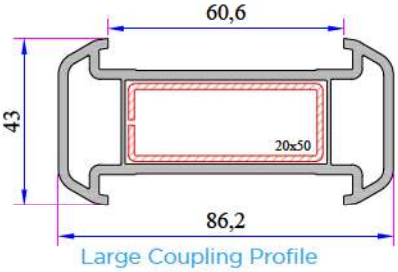

Large Coupling Profile
060.5000

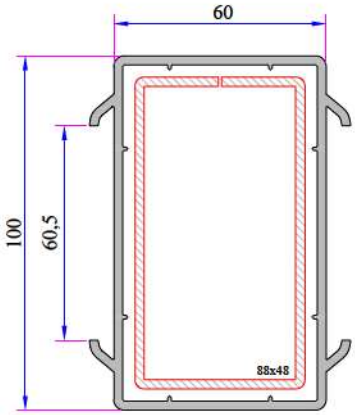

60x100 Spiked Box Profile
060.5203 0

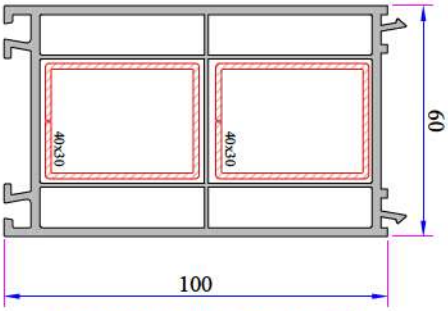

60x100 Frame Lifting Profile
900.5303

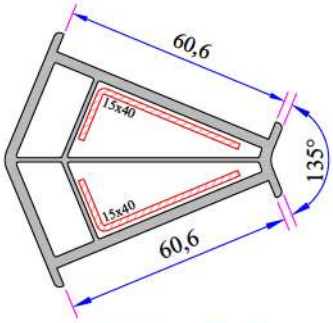

135° Corner Profile
060.5102

W 630 - W 632 SERIES
PVC PROFILE SYSTEM

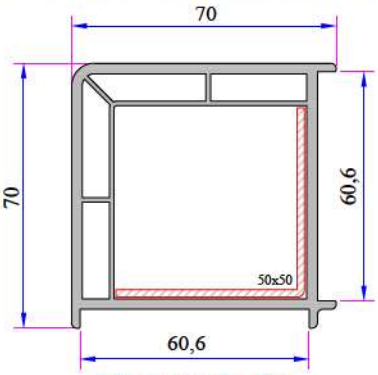

90° Corner Profile
060.5100

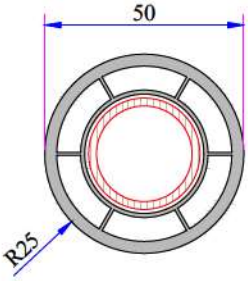

Pipe Profile
050.5106

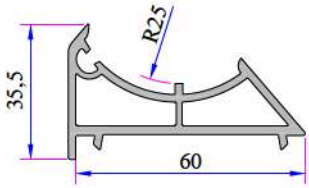

Angle Pipe Adaptor Profile
060.5104

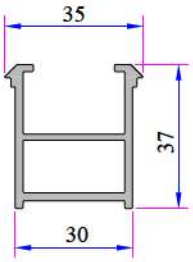

Frame Montage Profile
060.5301

W 632 Re-Inforcement Profiles

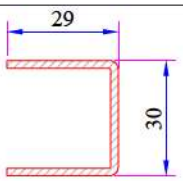

Super Frame - Sash - Offset Type Sash Profile Reinforcement
34022-12002

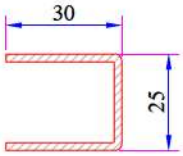

Frame - Mullion Profile Reinforcement
34022-12004

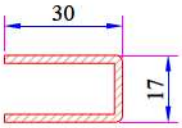

Frame Profile with Sill Reinforcement
34022-12032

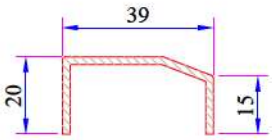

Narrow Sash Profile Reinforcement
34022-12031

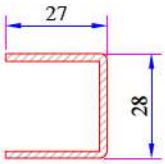

9 Axis Outward Opening Sash Profile Reinforcement
34022-12020

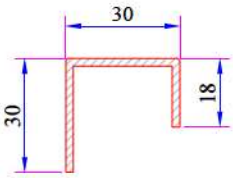

22 Axis Outward Opening Sash Profile Reinforcement
34022-12022

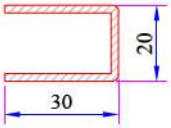

Frame Profile with Sill 60mm Reinforcement
34022-12006

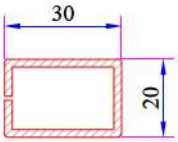

Outward Opening Mullion Profile Reinforcement
34022-12109

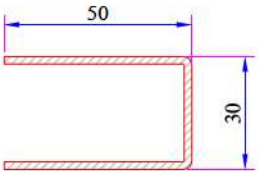

Door Sash - Outward Opening Door Sash Profile Reinforcement
34022-12013

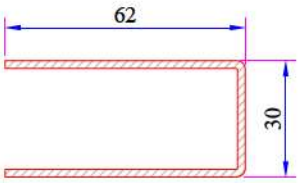

Super Door Sash Profile Reinforcement
34022-12029

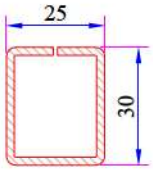

Mullion Profile Static Reinforcement
34022-12109

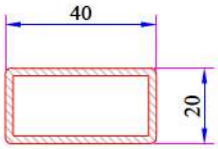

Static Mullion Profile Reinforcement
34022-12114

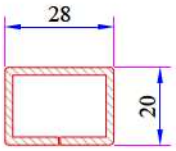

Lap Joint Profile Reinforcement
34022-12118

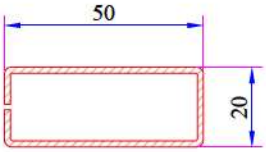

Large Couple Profile Reinforcement
34022-12105

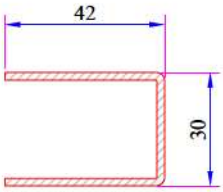

Eco Door Sash - Outward Opening Eco Door Sash Profile Reinforcement
34022-12023

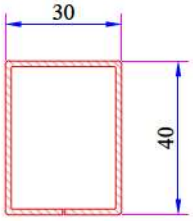

60x100 Frame Lifting Profile Reinforcement
34022-12120

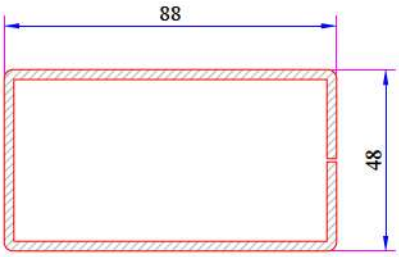

60x100 mm Box Profile Reinforcement
34022-12102

135° Corner Profile Reinforcement
34022-12301

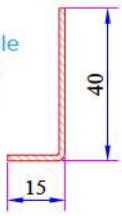

90° Corner Profile Reinforcement
34022-12302

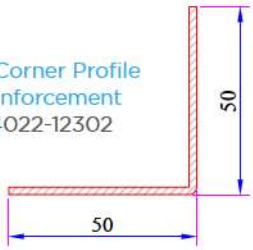

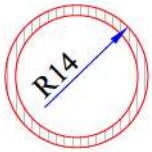

Pipe Profile
34022-12503

W 632 Installation

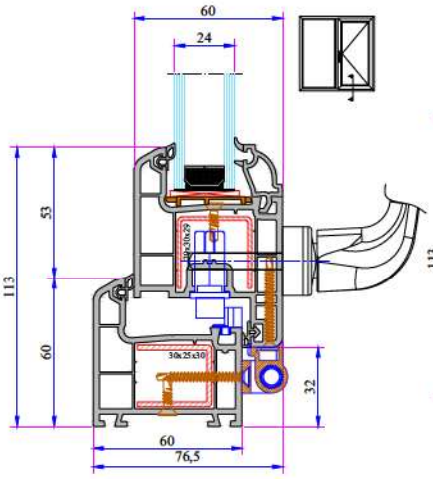

Frame - Sash Installation

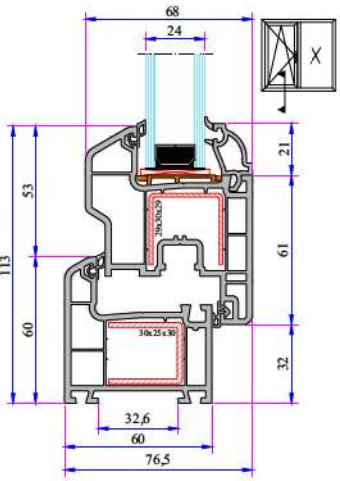

Frame - Offset Type Sash Installation

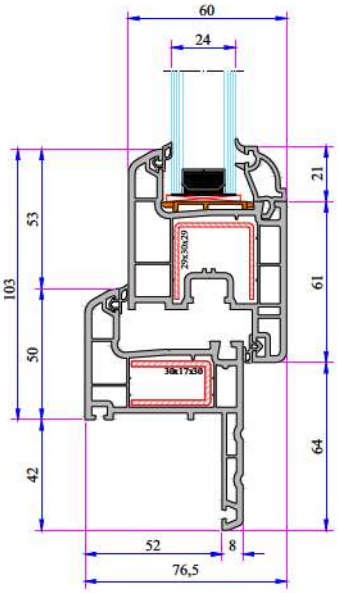

Frame with Sill - Sash Installation

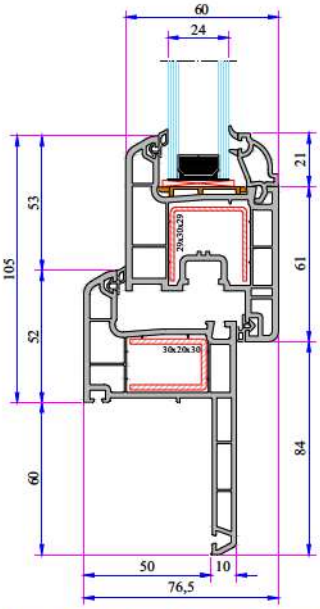

Frame with Sill (60mm) - Sash Installation

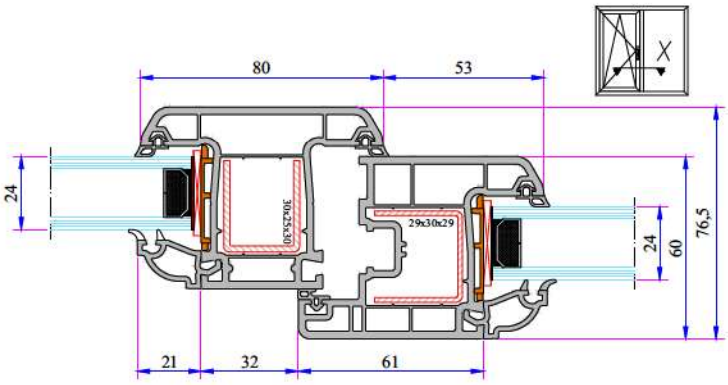

Mullion - Sash Installation

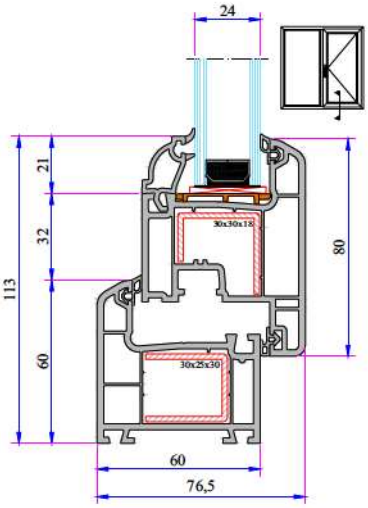

Frame - Outward Opening Sash Installation

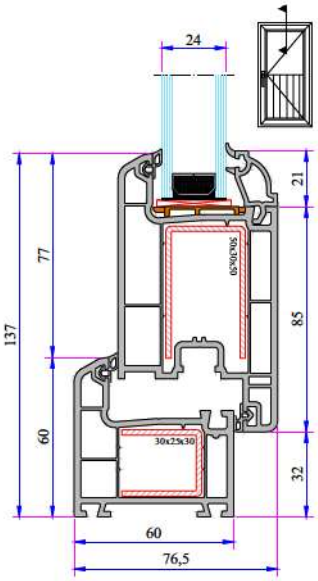

Frame - Door Sash Installation

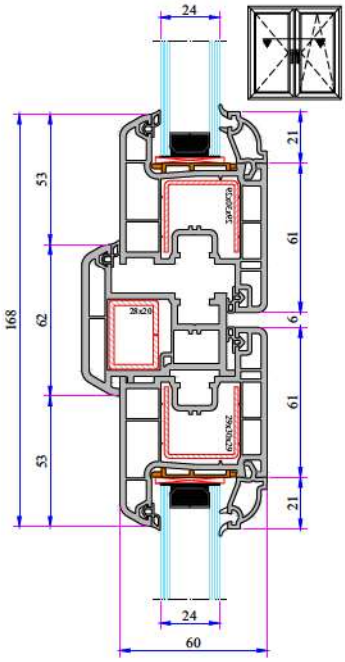

Sash - Lap Joint - Sash Installation

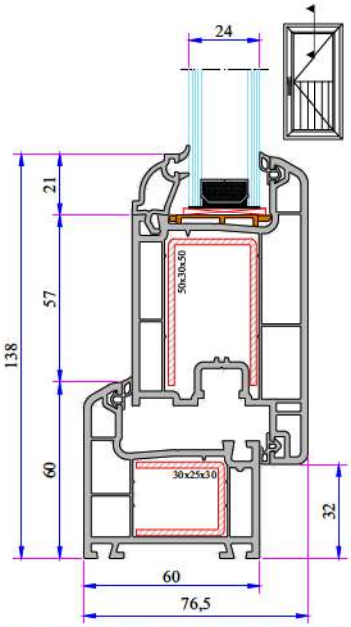

Frame - Outward Opening Door Sash Installation

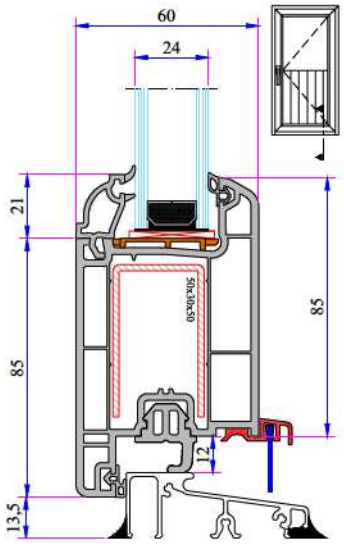

With Aluminium Threshold Frame Door Sash Installation

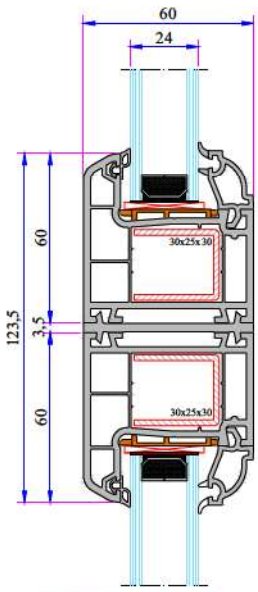

Narrow Coupling Profile Installation

W 630 - W 632 SERIES
PVC PROFILE SYSTEM

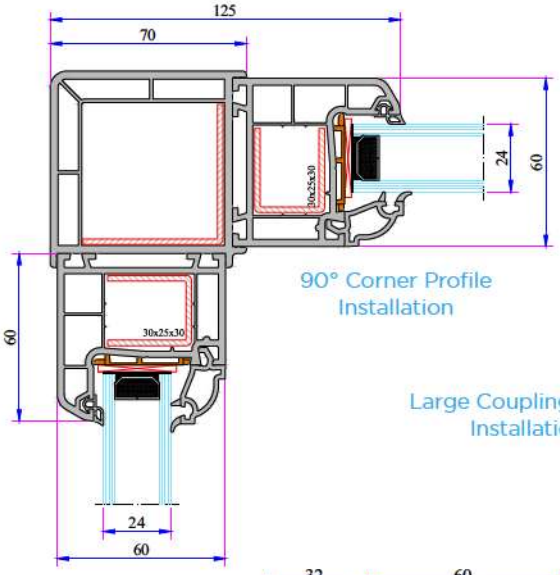

90° Corner Profile Installation

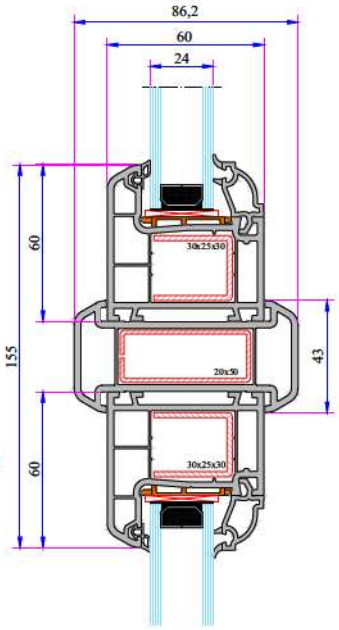

Large Coupling Profile Installation

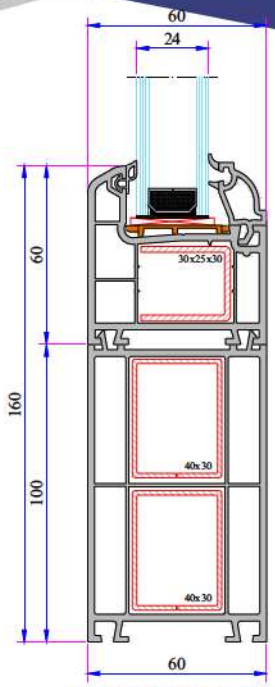

100mm Frame Lifting Profile Installation

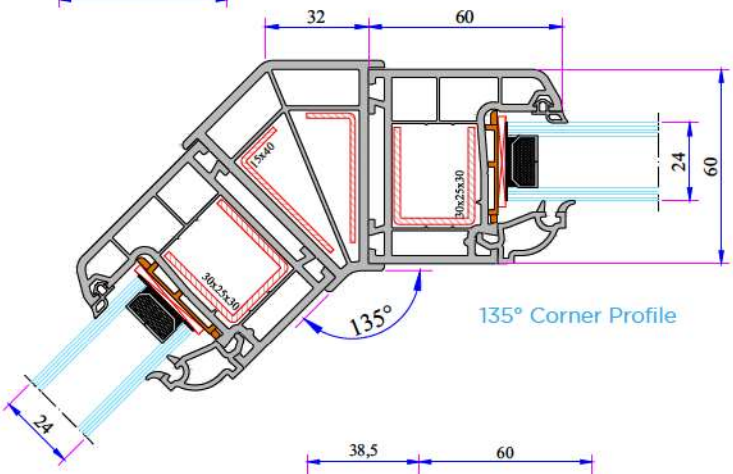

135° Corner Profile

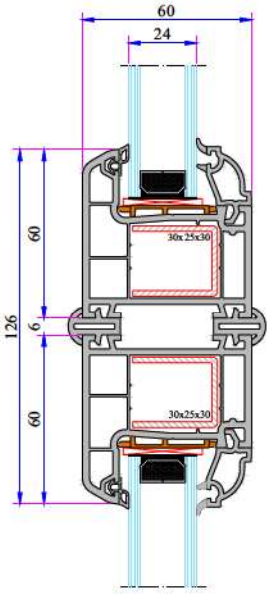

Short Coupling Profile Installation

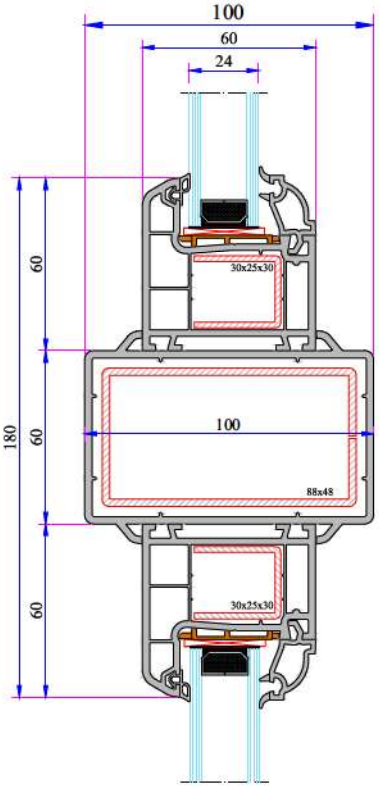

60x100 Box Profile Installation

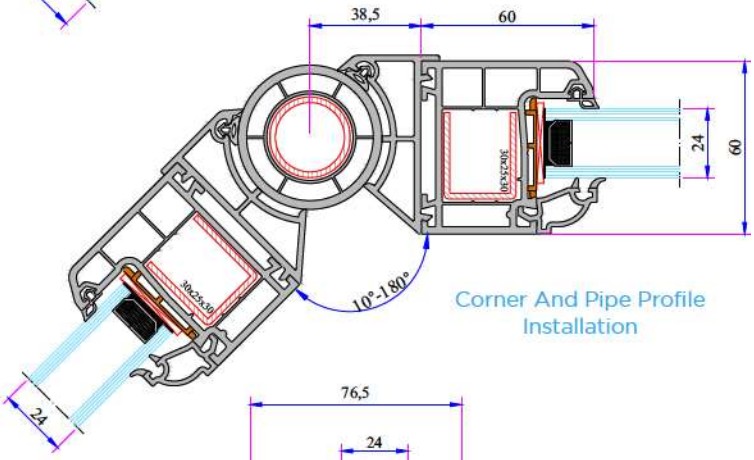

Corner And Pipe Profile Installation

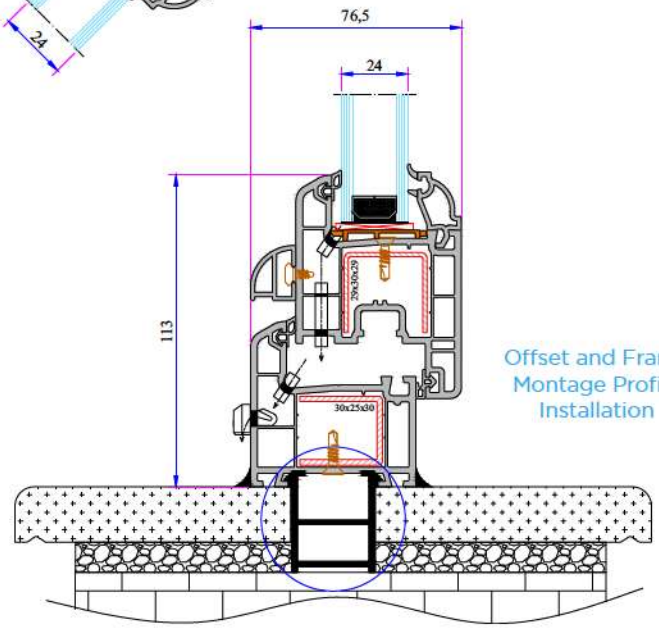

Offset and Frame Montage Profile Installation

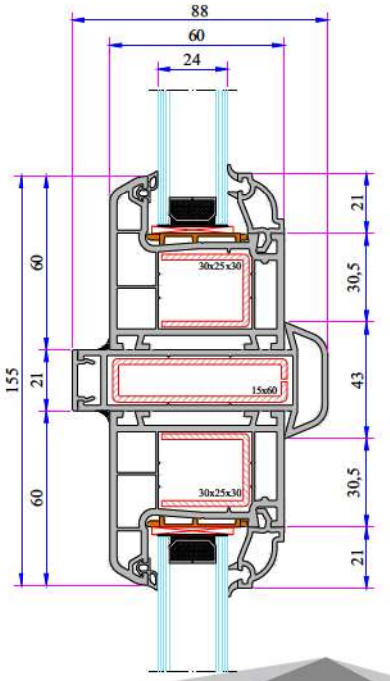

Universal Large Coupling Profile Installation

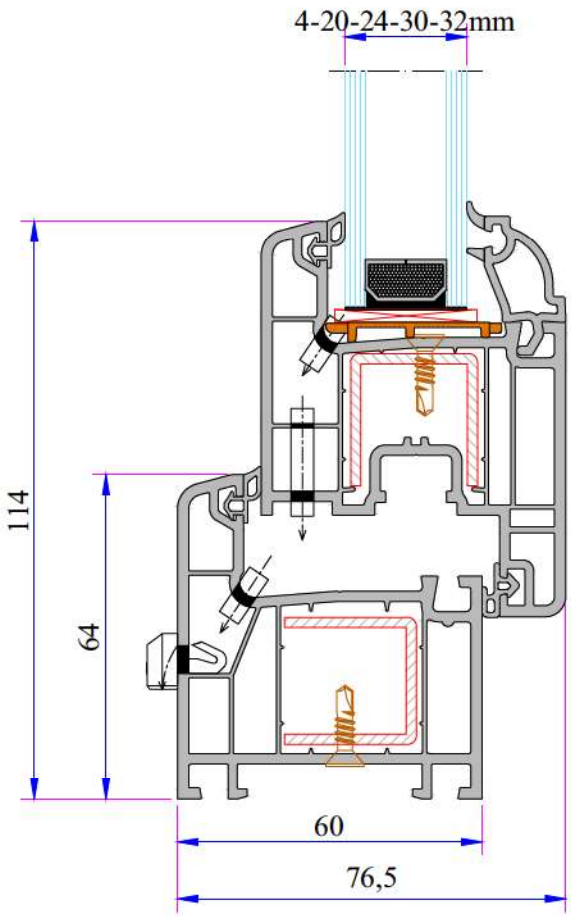

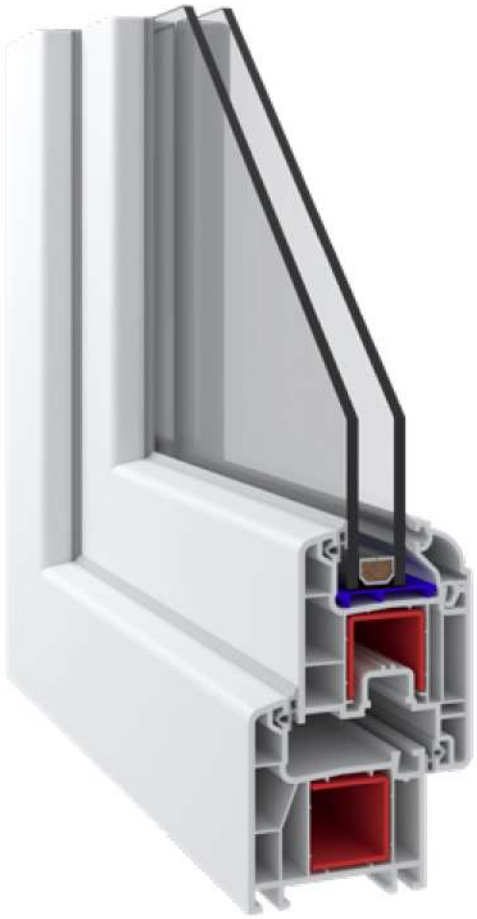

TECHNICAL

W 624 SERIES

Profile Width: 60 mm

Number of chambers: 4

Profile Class: C Class (TS EN 12608-1)

Seal Type: External / Internal double seal system

Seal Type and Color: TPE – Grey /Black

Glass Thickness (mm): 4, 20, 24, 30, 32 mm

The thermal insulation Uf: 1,45 W/m²K

INSTRUCTION

· The main profile has 60 mm width.

· Because of the elastic grey and black seal which does not leave any stain on profiles will be provided maximum air, water, dust and sound isolation.

· Due to the 4 chambers profiles, it has maximum performance for thermal, sound and water isolation.

· It is a series of profiles with very special design that provides maximum wind resistance on high rise buildings.

· Excluding normal sash profile there is also chance to have a choice for offset type sash profile.

· In addition to white profile a different laminated color range is available.

· 4-5 mm single glazing application of 20, 24, 30, 32 mm glazing beads give us alternatives of using double, triple glazing and panels.

W 624 SERIES
PVC PROFILE SYSTEM

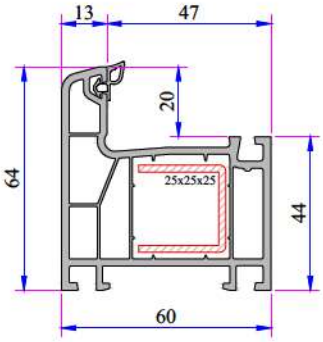

Frame Profile
624.1000

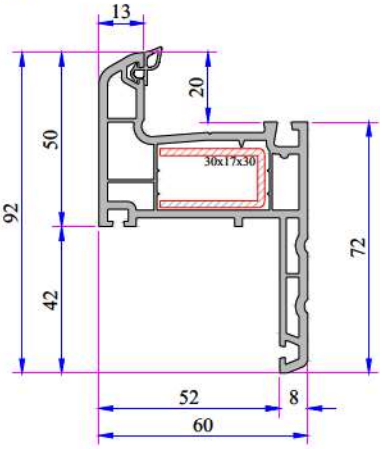

Frame with Dec.Sill
42 mm
632.1200
632.1200.PC (with Double Seal)

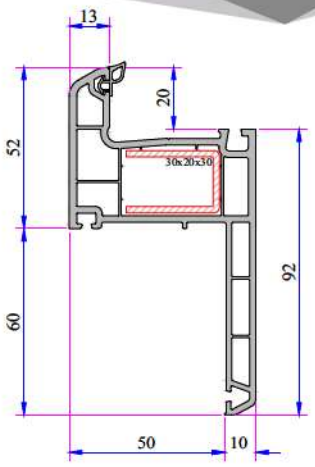

Frame with Flat Sill 60 mm
632.1207
632.1207.PC (with Double Seal)

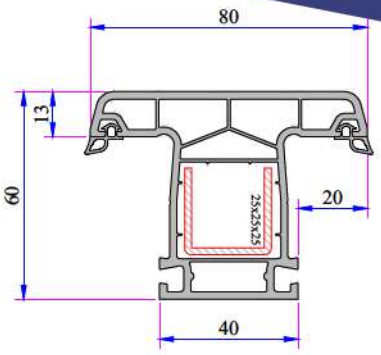

Mullion Profile
624.3000

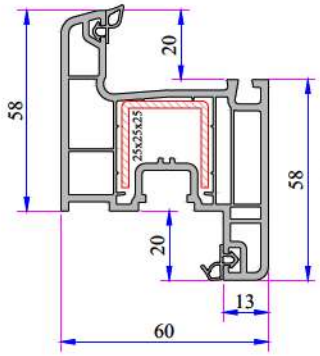

Sash Profile
624.2000

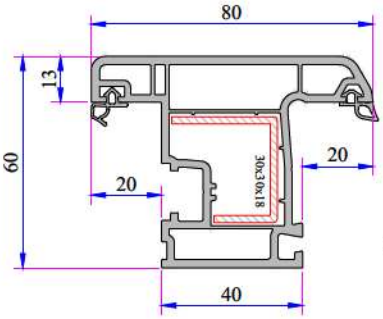

Outward Opening Sash Profile
632.2014

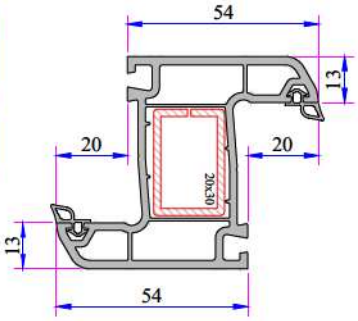

Outward Opening
Mullion Profile
632.3005

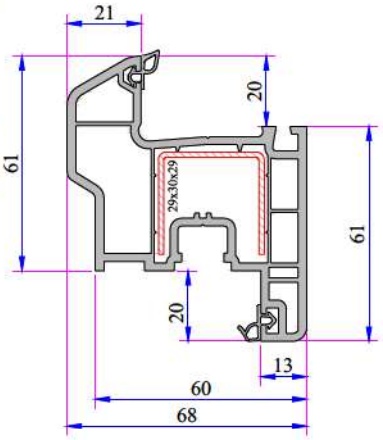

Offset Type Sash Profile
632.2200

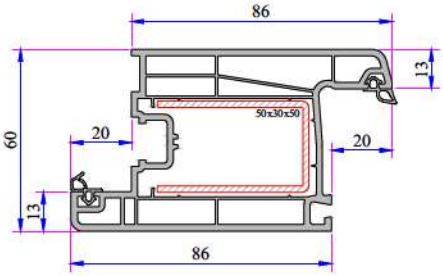

Door Sash Profile
624.2100

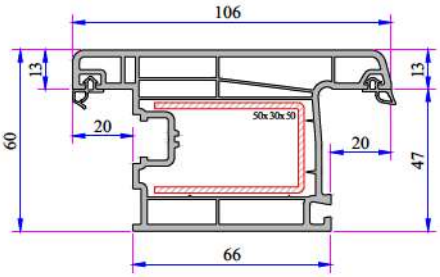

Outward Opening Door Sash Profile
624.2101

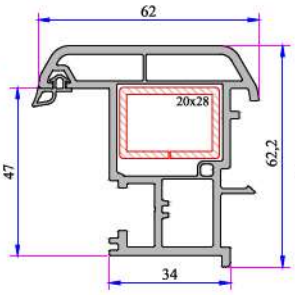

Lap Joint Profile
632.3104

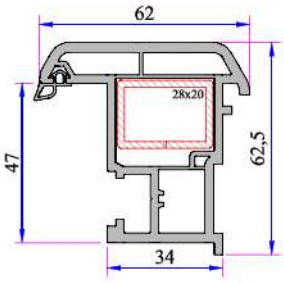

Lap Joint Profile
632.3100

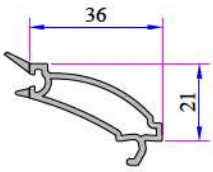

Single Glazing
Bead 4-6 mm
101.4002

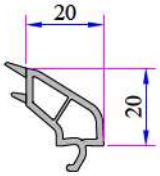

Double Glazing
Bead 20 mm
101.4100

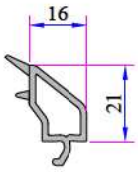

Double Glazing
Bead 24 mm
750.4500

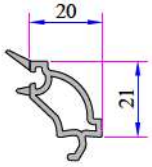

Double Glazing
Bead 20 mm
101.4102

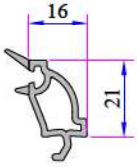

Double Glazing
Bead 24 mm
101.4202

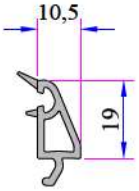

Triple Glazing Bead
30 mm
332.4100

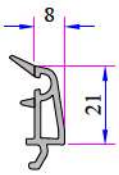

Triple Glazing Bead
32 mm
101.4500

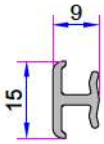

Universal Short Coupling
Profile
099.5004

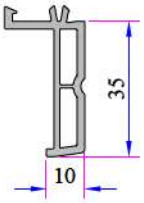

Frame Sill Profile (35mm)
099.5523

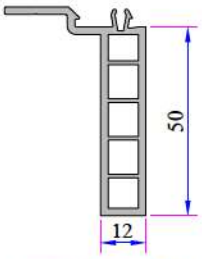

Frame Sill Profile (50mm)
099.5524

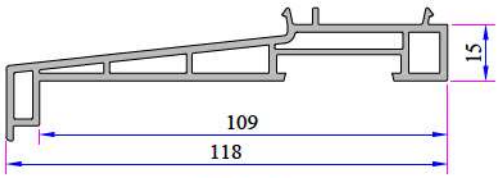

Sill Profile
058.5504

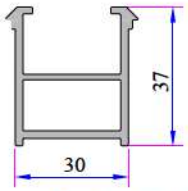

Frame Montage Profile
060.5301

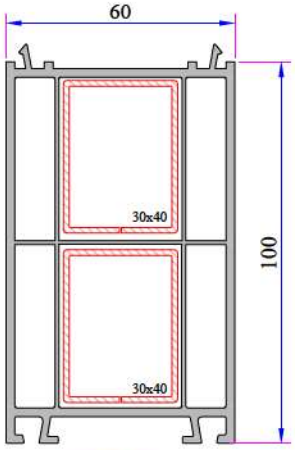

60x100 Frame
Lifting Profile
900.5303

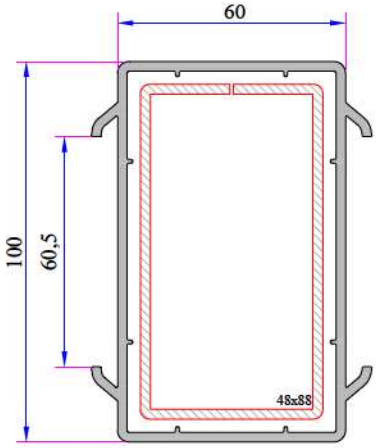

60x100 Spiked Box Profile
060.5203

Universal Large Coupling
Cover Profile
058.5707

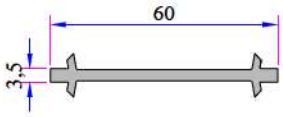

Narrow Coupling Profile
060.5001

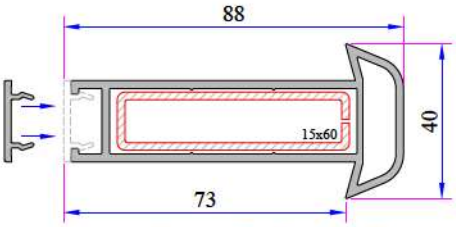

Universal Large Coupling Profile
058.5000

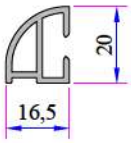

Offset Profile
900.6307

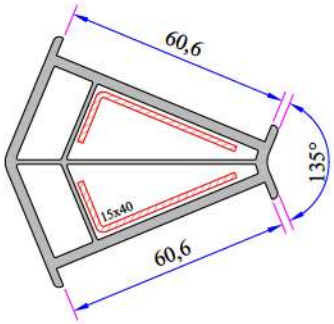

135° Corner Profile
060.5102

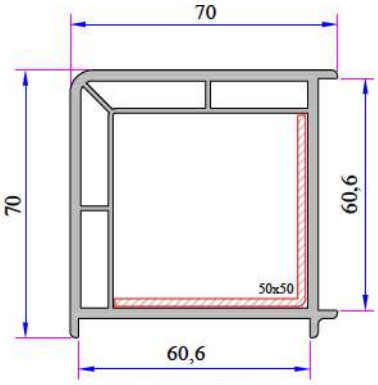

90° Corner Profile
060.5100

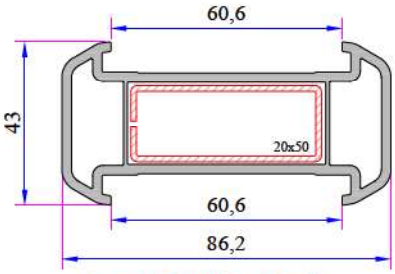

Large Coupling Profile
060.5000

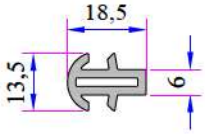

Short Coupling Profile
099.5003

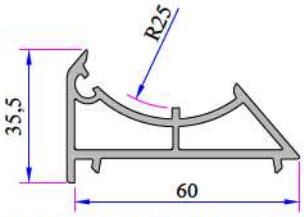

Angle Pipe Adaptor Profile
060.5104

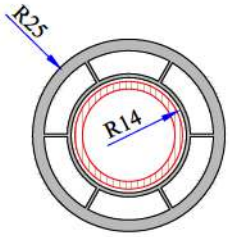

Pipe Profile
050.5106

W 624 Re-Inforcement Profiles

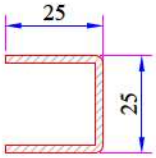

Frame - Mullion - Sash - Profile
Reinforcement
34022-12003

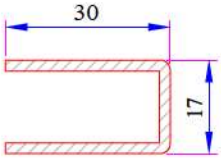

Frame Profile with Sill
Reinforcement
34022-12032

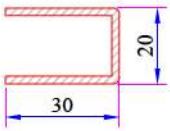

Frame Profile with Sill 60mm
Reinforcement
34022-12006

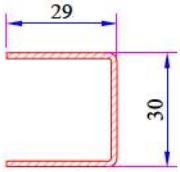

Offset Type Sash Profile
Reinforcement
34022-12002

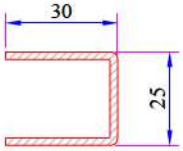

Mullion Profile
Reinforcement
34022-12004

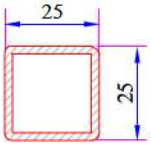

Mullion Profile Static
Reinforcement
34022-12122

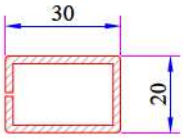

Outward Opening
Mullion Profile
Reinforcement
34022-12109

W 624 SERIES
PVC PROFILE SYSTEM

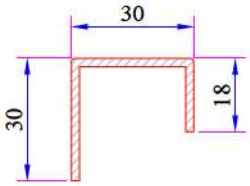

22 Axis. Outward Opening Sash Profile Reinforcement
34022-12022

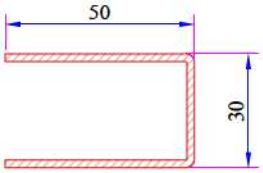

Door Sash - Outward Opening Door Sash Profile Reinforcement
34022-12013

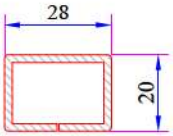

Lap Joint Profile Reinforcement
34022-12118

Universal Large Coupling Profile Reinforcement
34022-12123

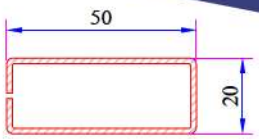

Large Couple Profile Reinforcement
34022-12105

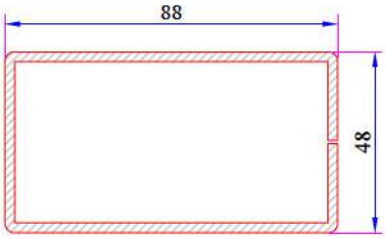

60x100 mm Box Profile Reinforcement
34022-12102

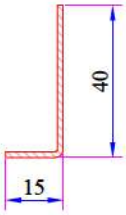

135° Corner Profile Reinforcement
34022-12301

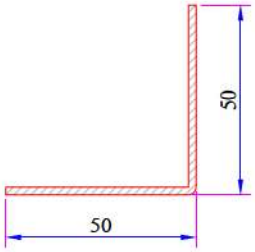

90° Corner Profile Reinforcement
34022-12302

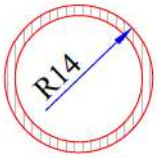

Pipe Profile Reinforcement
34022-12503

W 624 Installation

Frame - Sash Installation

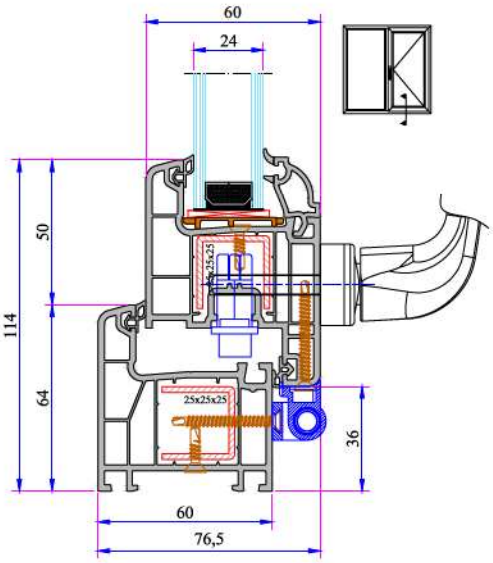

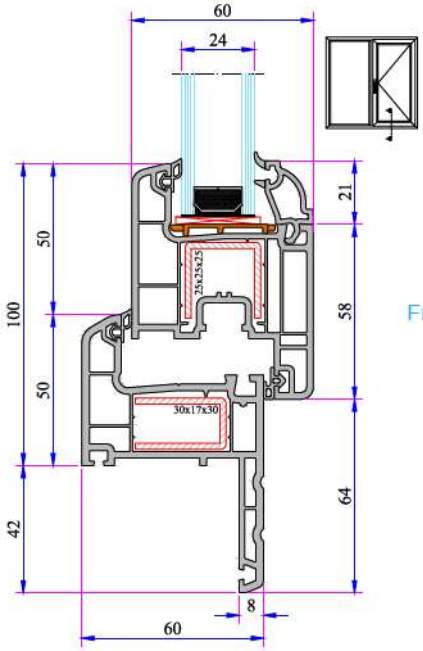

Frame with Sill - Sash Installation

Frame with Sill (60mm) - Sash Installation

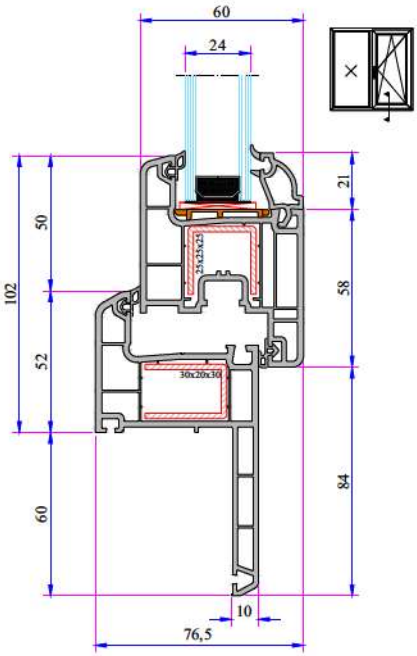

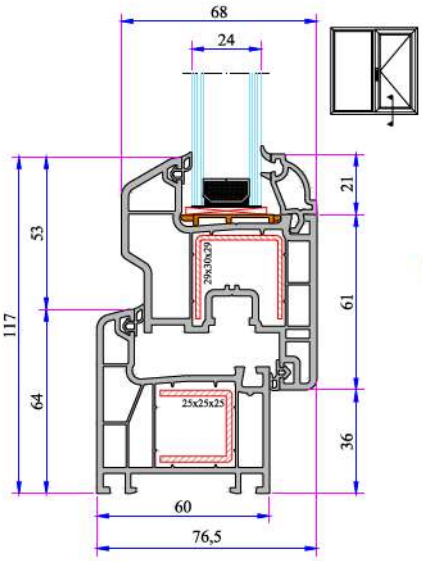

Frame - Offset Type Sash Installation

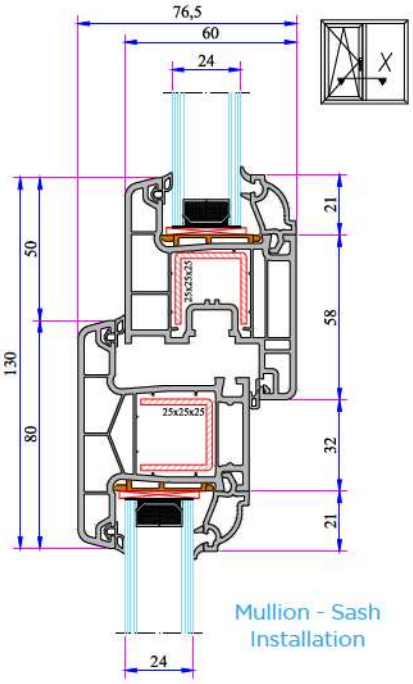

Mullion - Sash Installation

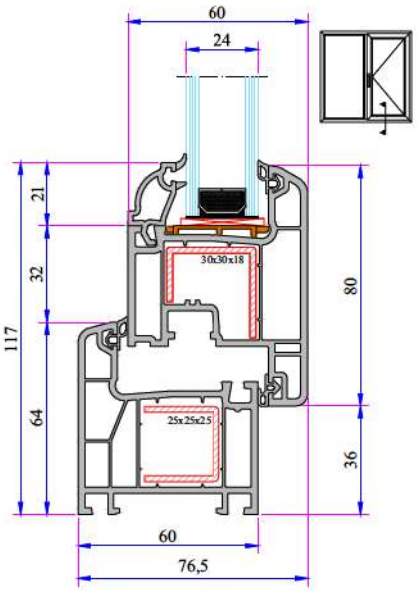

Frame - Outward Opening Sash Installation

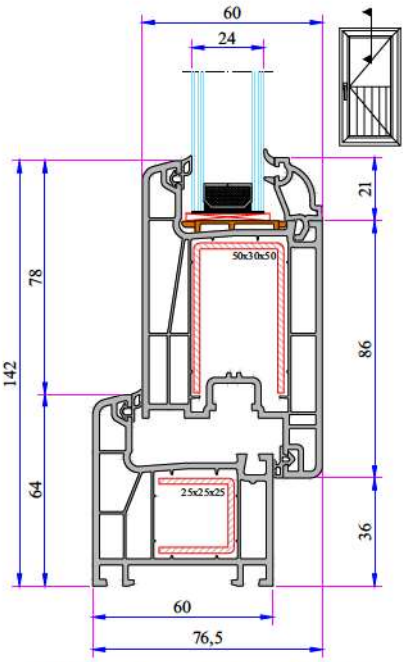

Frame - Door Sash Installation

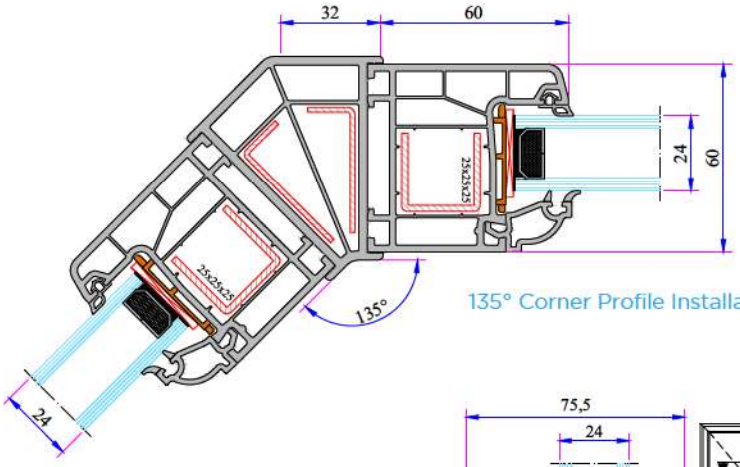

135° Corner Profile Installation

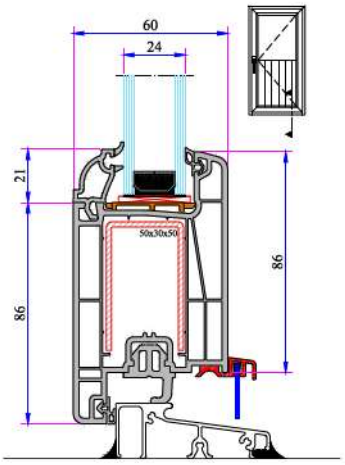

With Aluminium Threshold Frame Door Sash Installation

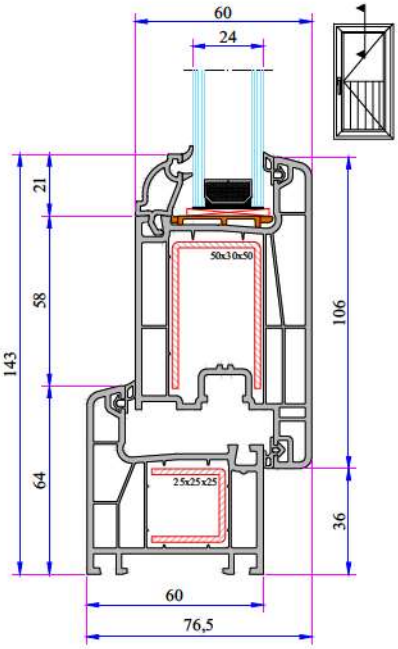

Frame - Outward Opening Door Sash Profile

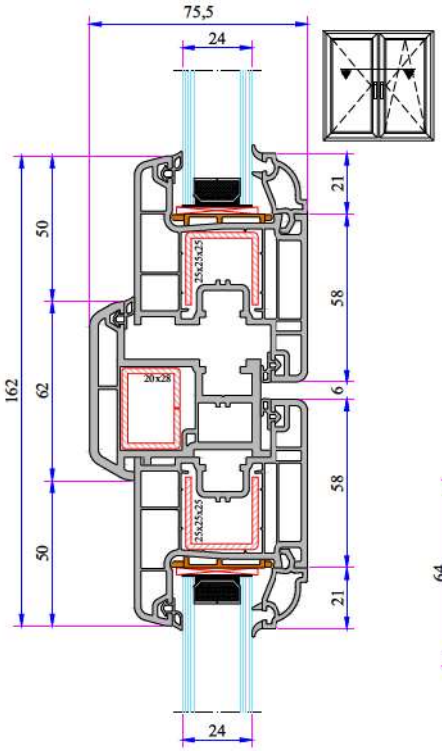

Sash - Lap Joint - Sash Installation

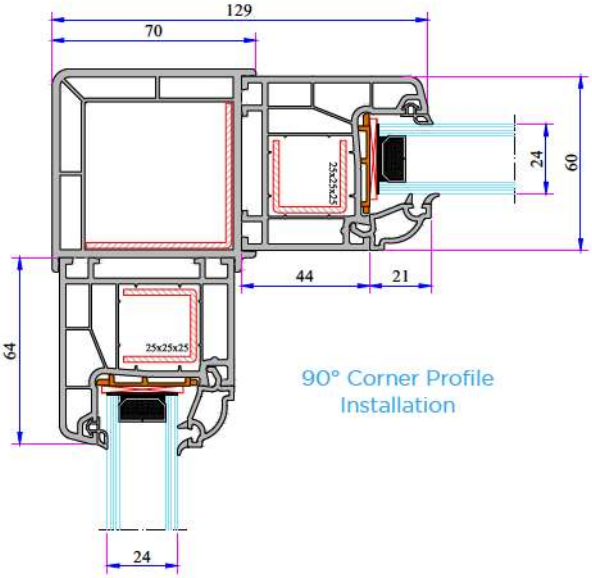

90° Corner Profile Installation

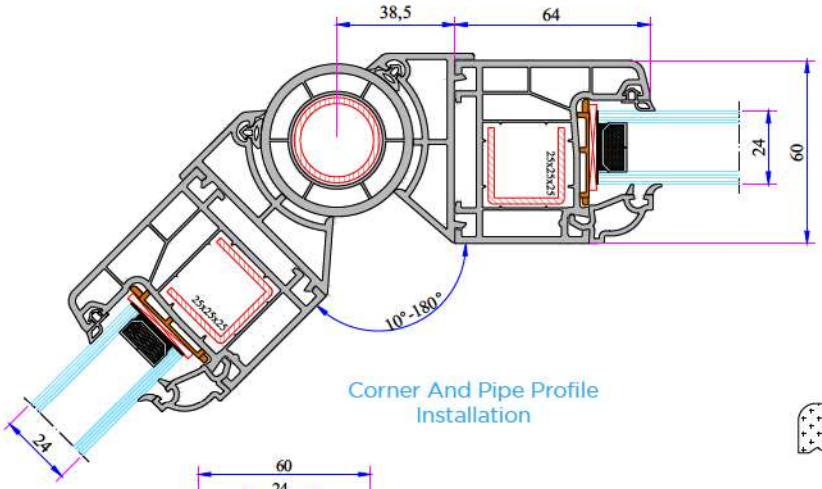

Corner And Pipe Profile Installation

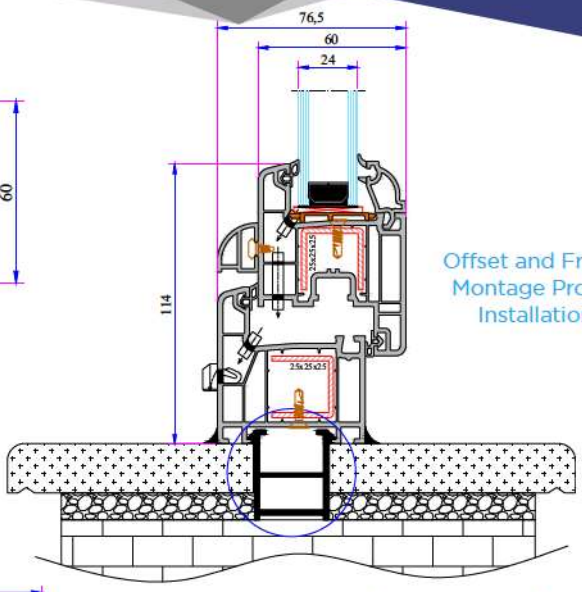

Offset and Frame Montage Profile Installation

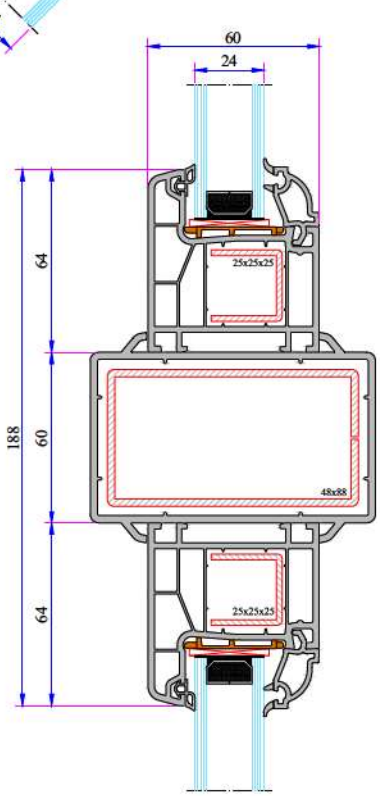

60x100 Box Profile Installation

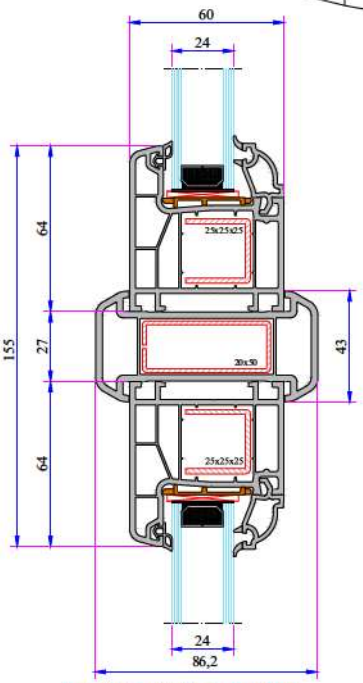

Large Coupling Profile Installation

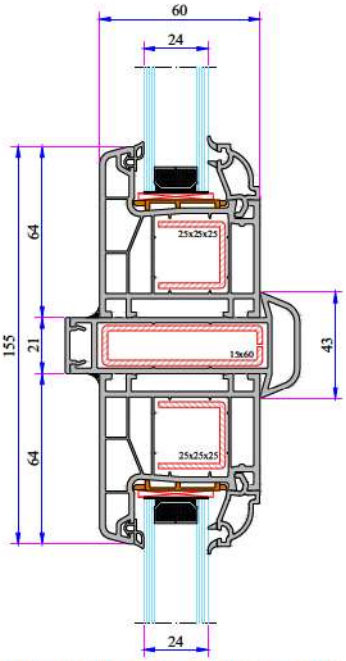

Universal Large Coupling Profile Installation

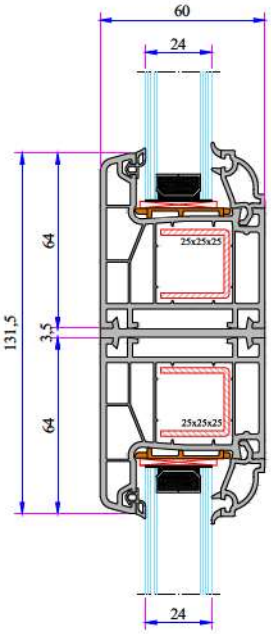

Narrow Coupling Profile Installation

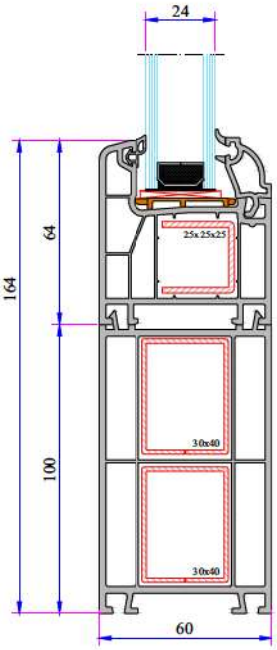

100mm Frame Lifting Profile Installation

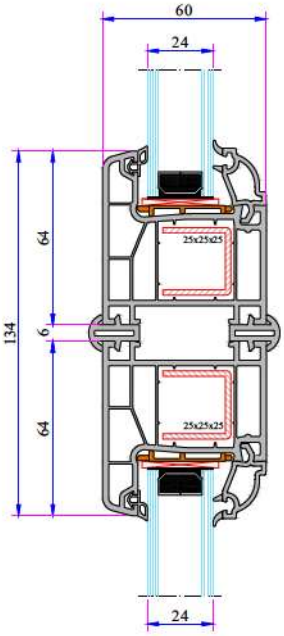

Short Coupling Profile Installation

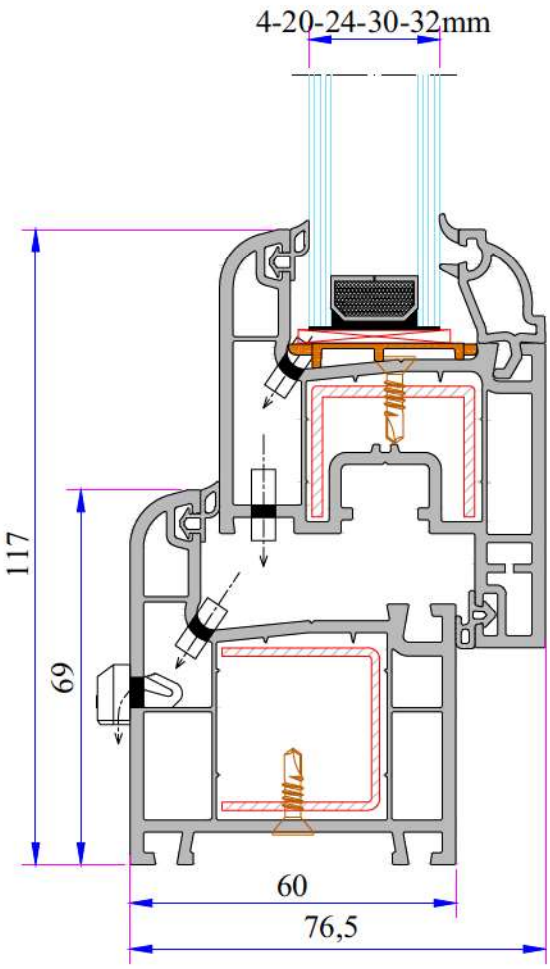

TECHNICAL

WO 60 SERIESS (101 SERIES)

Profile Width: 60 mm

Number of chambers: 3

Profile Class: B Class (TS EN 12608-1)

Seal Type: External / Internal double seal system

Seal Type and Color: TPE – Grey /Black

Glass Thickness (mm): 4, 20, 24, 30, 32 mm

The thermal insulation Uf: 1,56 W/m²K

INSTRUCTION

· The main profile has 60 mm width.

· Because of the elastic grey and black seal which does not leave any stain on profiles will be provided maximum air, water, dust and sound isolation.

· Due to the 3 chambers profiles, it has maximum performance for thermal, sound and water isolation.

· It is a series of profiles with very special design that provides maximum wind resistance on high rise buildings.

· Excluding normal sash profile there is also chance to have a choice for offset type sash profile.

· In addition to white profile a different laminated color range is available.

· 4-5 mm single glazing application of 20, 24, 30, 32 mm glazing beads give us alternatives of using double, triple glazing and panels.

WO 60 SERIES
PVC PROFILE SYSTEM

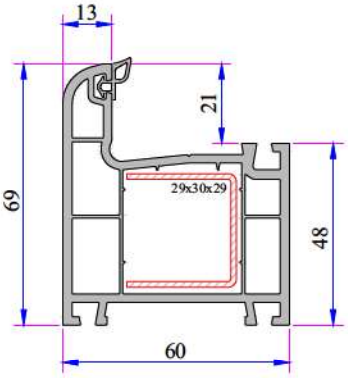

Super Frame Profile
101.1001

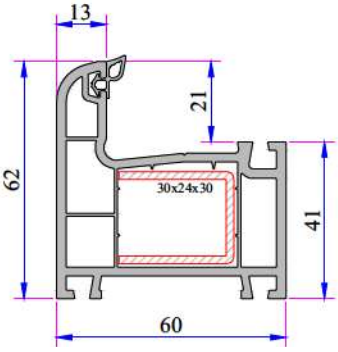

Frame Profile
101.1000

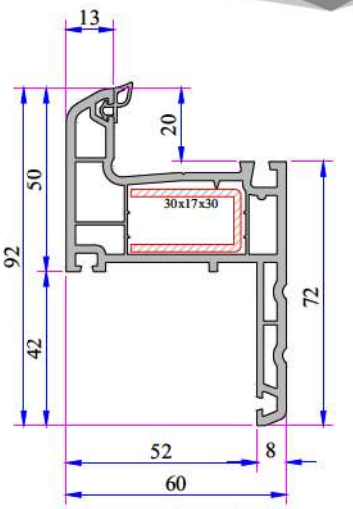

Frame Profile with Sill
632.1200
632.1200.PC (with Double Seal)

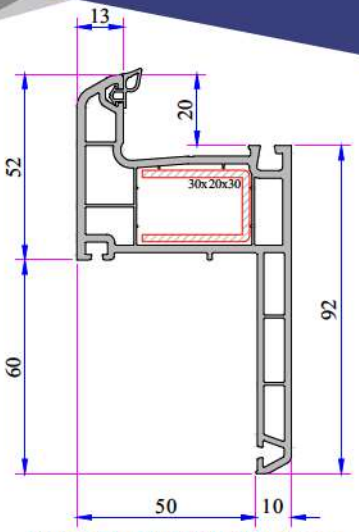

Frame Profile With Sill 60mm
632.1207
632.1207.PC (with Double Seal)

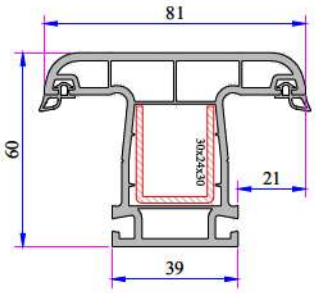

Mullion Profile
101.3000

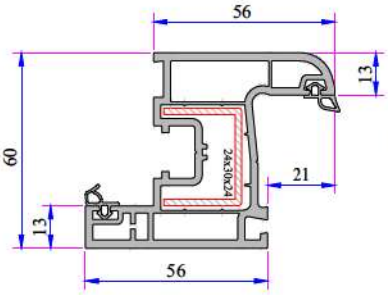

Sash Profile
101.2000

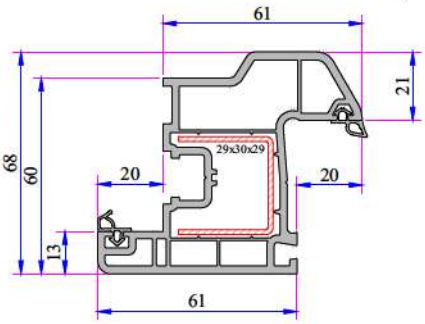

Offset Type Sash Profile
632.2200

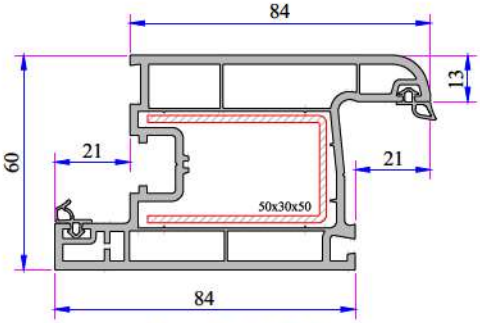

Door Sash Profile
101.2100

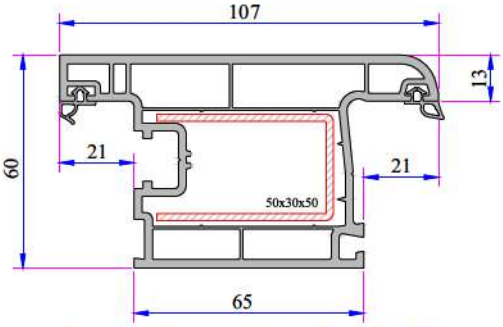

Outward Opening Door Sash Profile
101.2101

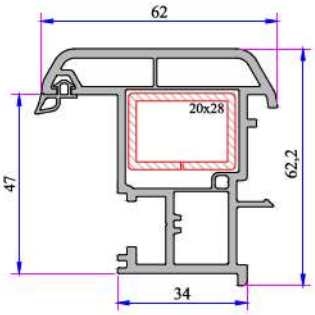

Lap Joint Profile
632.3104

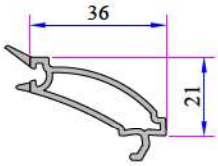

Single Glazing
Bead 4mm
101.4002

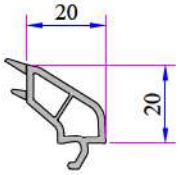

Double Glazing Bead
20mm
101.4100

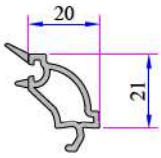

Double Glazing
Bead 20mm
101.4102

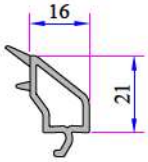

Double Glazing
Bead 24mm
750.4500

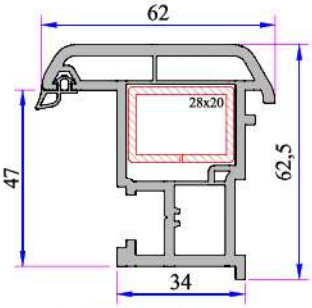

Lap Joint Profile
632.3100

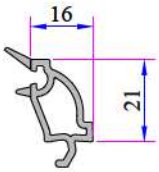

Double Glazing
Bead 24mm
101.4202

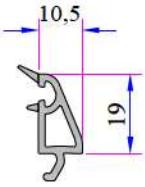

Triple Glazing
Bead 30mm
332.4100

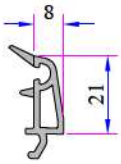

Triple Glazing
Bead 32mm
101.4500

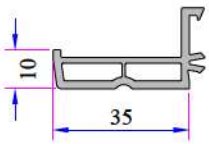

Frame Sill Profile (35mm)
099.5523

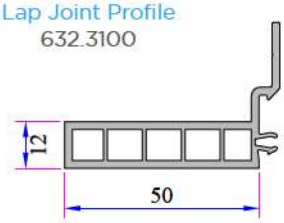

Frame Sill Profile (50mm)
099.5524

Universal Large Coupling Cover Profile

058.5707

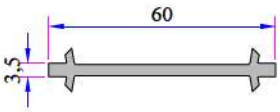

Narrow Coupling Profile
060.5001

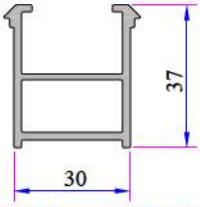

Frame Montage Profile
060.5301

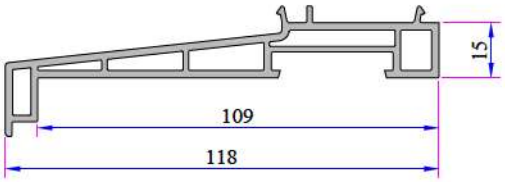

Sill Profile
058.5504

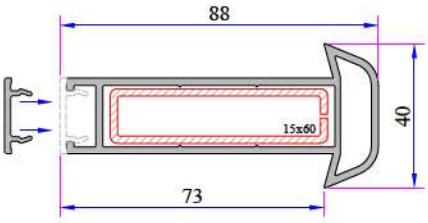

Universal Large Coupling Profile
058.5000

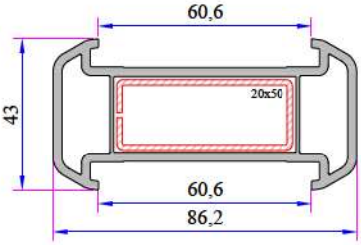

Large Coupling Profile
060.5000

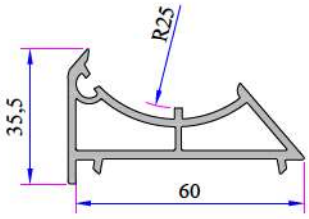

Angle Pipe Adaptor Profile
060.5104

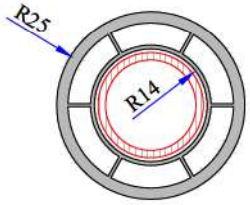

Pipe Profile
050.5106

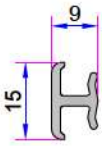

Universal Short Coupling Profile
099.5004

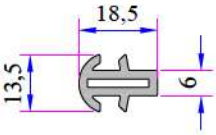

Short Coupling Profile
099.5003

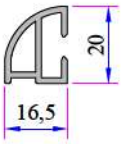

Offset Profile
900.6307

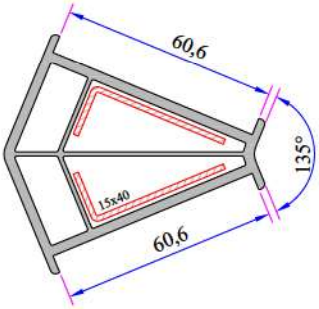

135° Corner Profile
060.5102

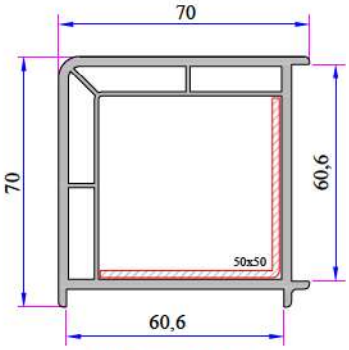

90° Corner Profile
060.5100

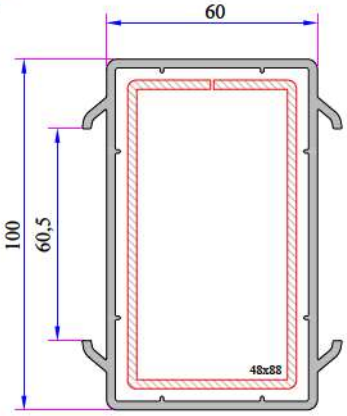

60x100 Box Profile
060.5203

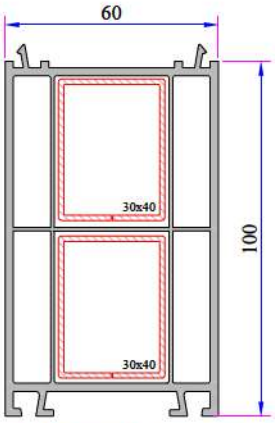

60x100 Frame Lifting Profile

900.5303

WO 60 Re-Inforcement Profiles

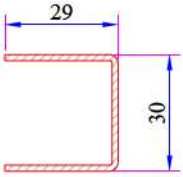

Super Frame - Offset Type Sash Profile Reinforcement
34022-12002

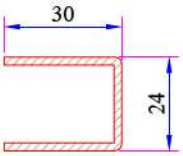

Frame - Mullion Profile Reinforcement
34022-12004

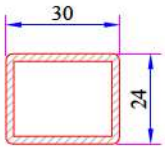

Mullion Profile Static Reinforcement
34022-12119

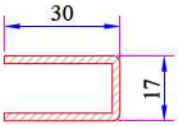

Frame Profile with Sill Reinforcement
34022-12032

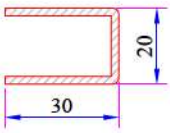

Frame Profile with Sill 60mm Reinforcement
34022-12006

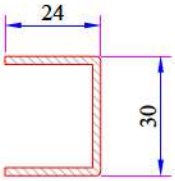

Sash Profile Reinforcement
34022-12025

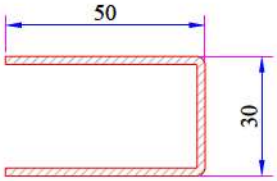

Door Sash- Outward Opening Door Sash Profile Reinforcement
34022-12013

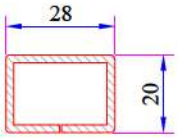

Lap Joint Profile Reinforcement
34022-12118

WO 60 SERIES
PVC PROFILE SYSTEM

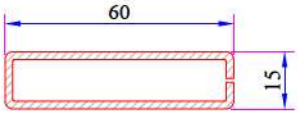

Universal Large Coupling Profile Reinforcement
34022-12123

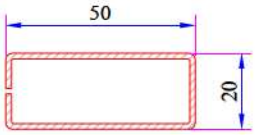

Large Couple Profile Reinforcement
34022-12105

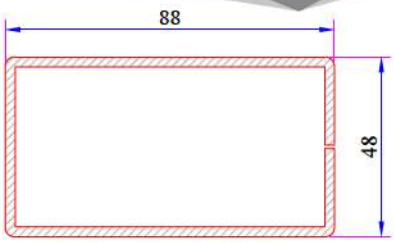

60x100 mm Box Profile Reinforcement
34022-12102

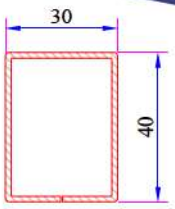

60x100 Frame Lifting Profile Reinforcement
34022-12120

135° Corner Profile Reinforcement
34022-12301

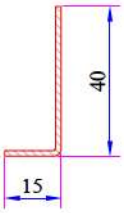

90° Corner Profile Reinforcement
34022-12302

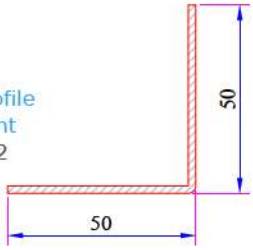

Pipe Profile Reinforcement
34022-12503

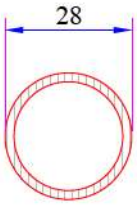

WO 60 Installation

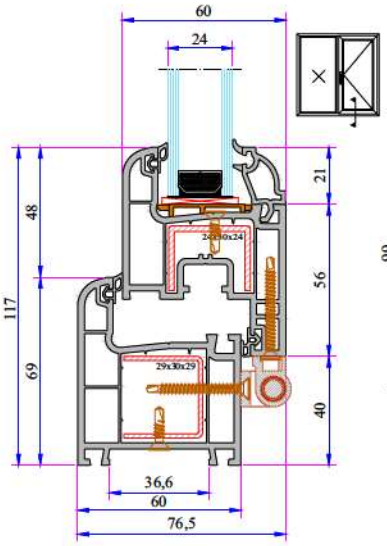

Frame - Sash Installation

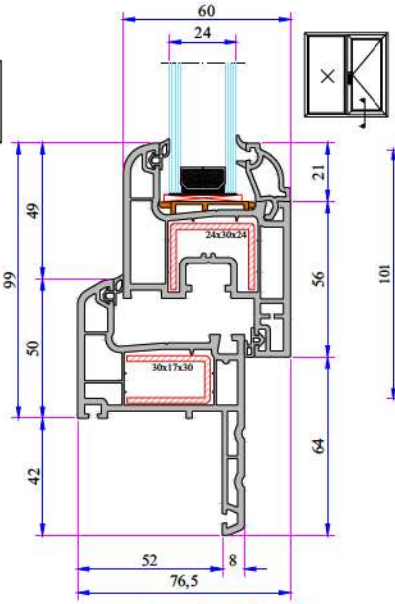

Frame Profile with Sill - Sash Installation

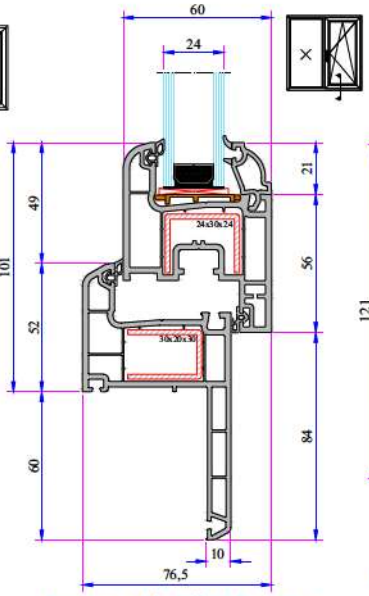

Frame with Sill (60mm) - Sash Installation

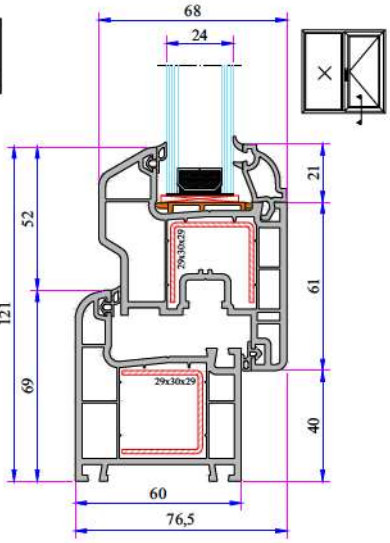

Frame - Offset Type Sash Profile

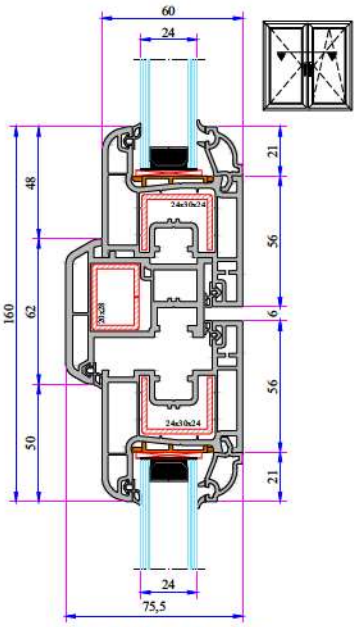

Sash - Lap Joint - Sash Installation

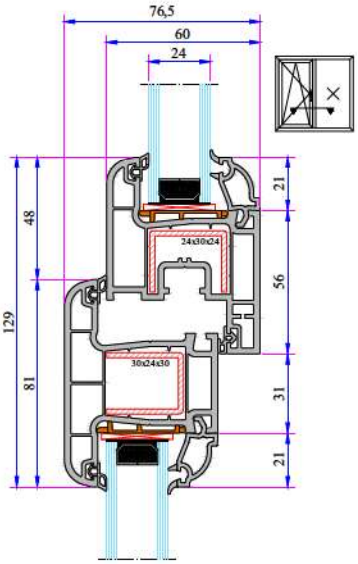

Mullion - Sash Profile Installation

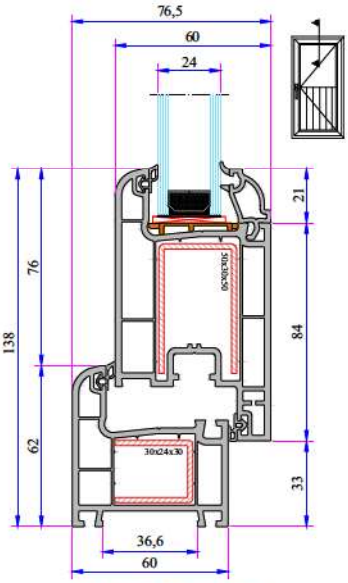

Frame - Door Sash Installation

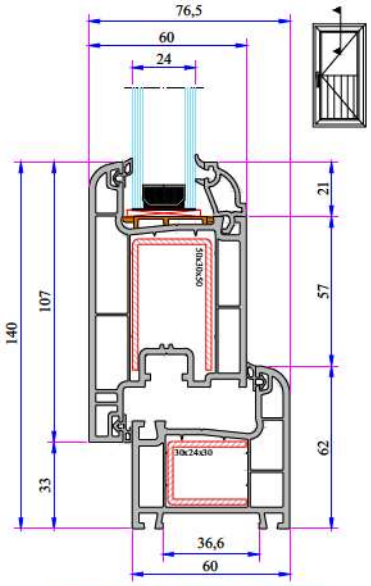

Frame - Outward Opening Door Sash Installation

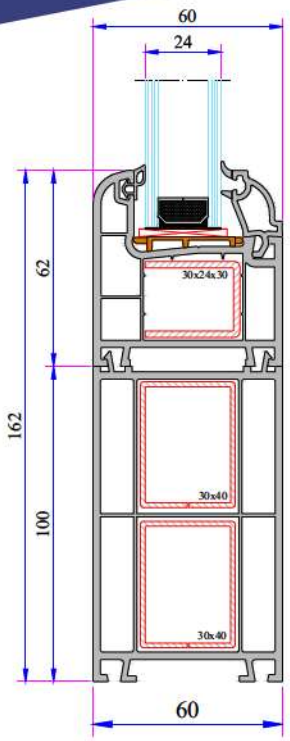

100mm Frame
Lifting Profile

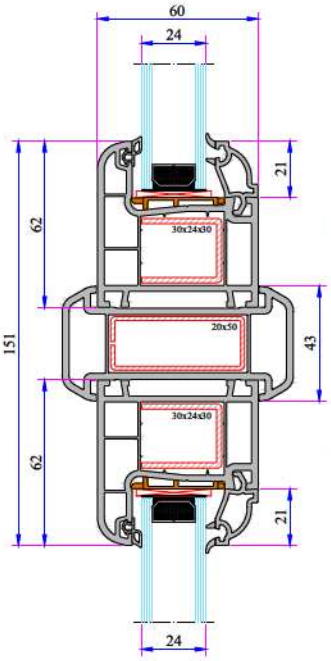

Large Coupling Profile
Installation

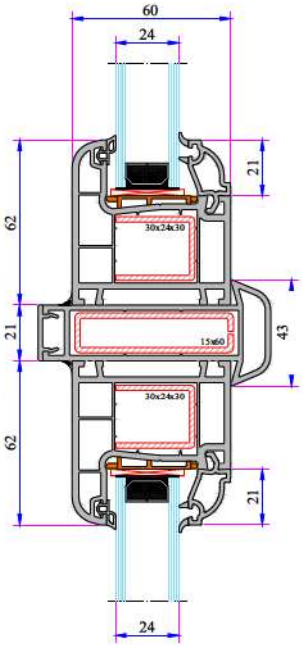

Universal Large Coupling
Profile Installation

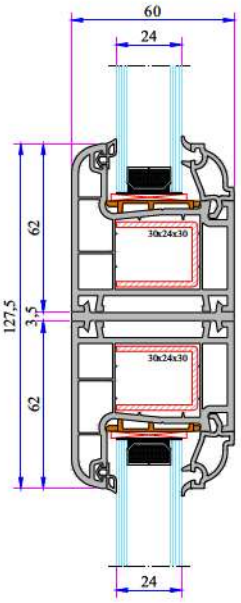

Narrow Coupling
Profile Installation

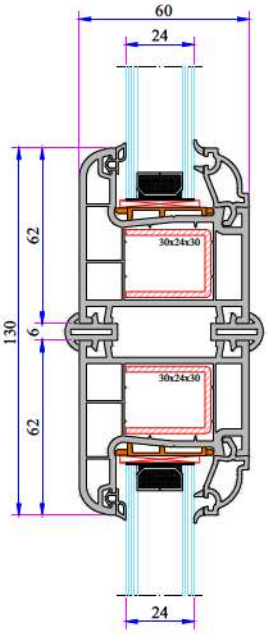

Short Coupling Profile
Installation

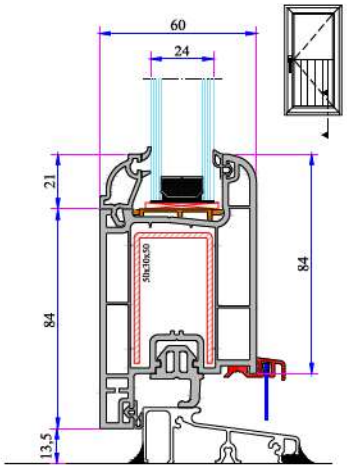

With Aluminium Threshold
Frame Door Sash
Installation

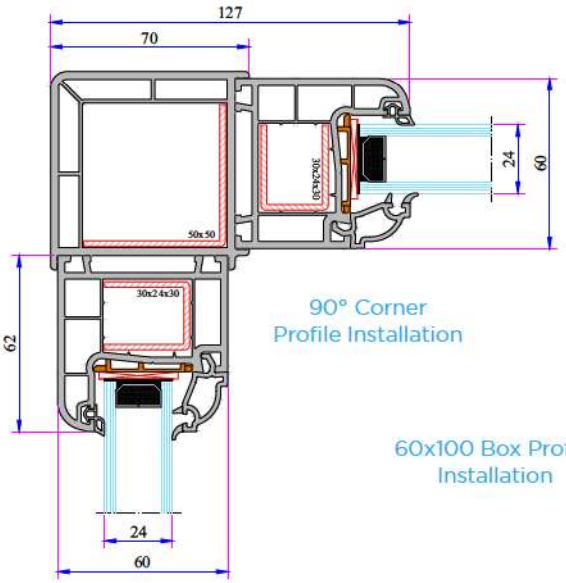

90° Corner
Profile Installation

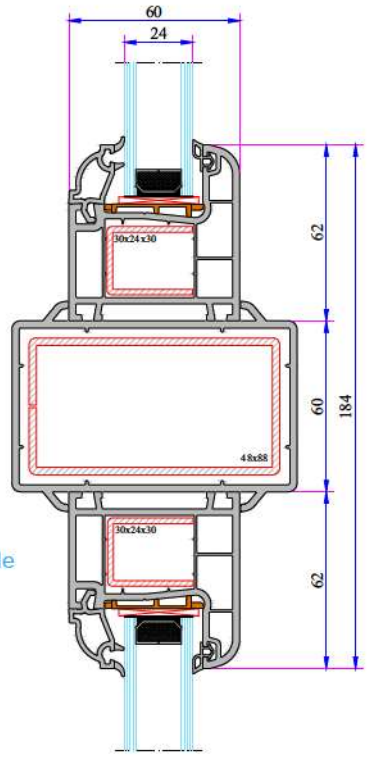

60x100 Box Profile
Installation

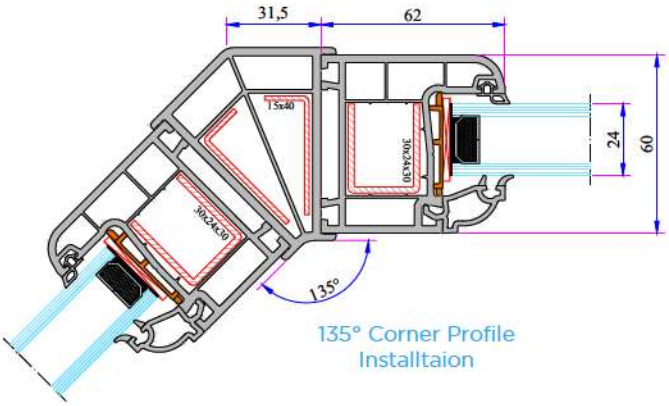

135° Corner Profile
Installtaion

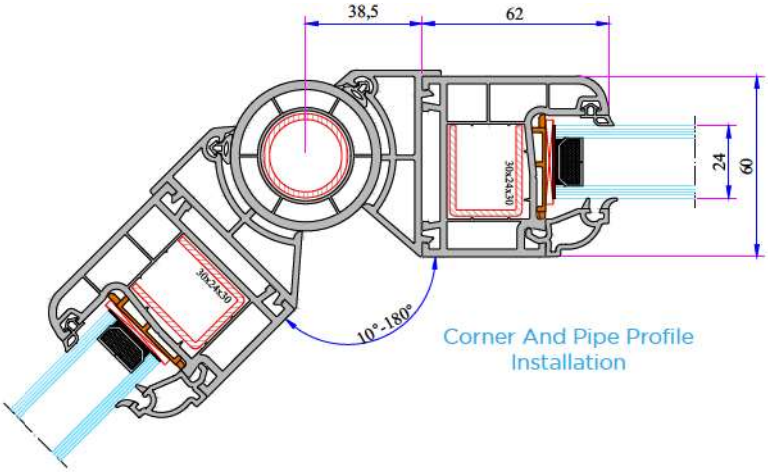

Corner And Pipe Profile
Installation

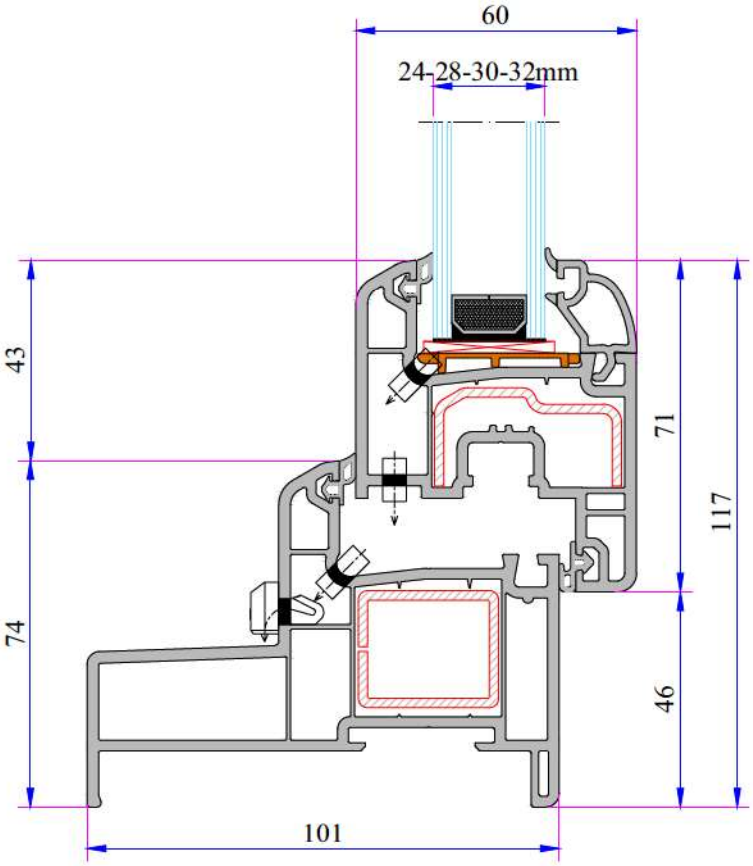

TECHNICAL

W FR 60 SERIES

Profile Width: 60 mm
Number of chambers: 3
Profile Class: B Class (TS EN 12608-1)
Seal Type: External / Internal double seal system
Seal Type and Color: TPE – Grey /Black
Glass Thickness (mm): 24, 28, 30, 32 mm

W FR 70 SERIES

Profile Width: 70 mm
Number of chambers: 5
Profile Class: B Class (TS EN 12608-1)
Seal Type: External / Internal double seal system
Seal Type and Color: TPE – Grey /Black
Glass Thickness (mm): 24, 28, 30, 32 mm

INSTRUCTION

· The profiles have 60 mm width.

· Because of the elastic grey and black seal which does not leave any stain on profiles will be provided maximum air, water, dust and sound isolation.

· Due to the 3 chambers profiles, it has maximum performance for thermal, sound and water isolation.

· It is a series of profiles with very special design that provides maximum wind resistance on high rise buildings.

· Excluding normal sash profile there is also chance to have a choice for offset type sash profile.

· In addition to white profile a different laminated color range is available.

· Application of 24, 28, 30, 32 mm glazing beads give us alternatives of using double, triple glazing and panels.

· It provides the visual integrity in the inner surface and the frame-wall connections due to integrated frame with sill profile.

FR 70 Serie Profiles

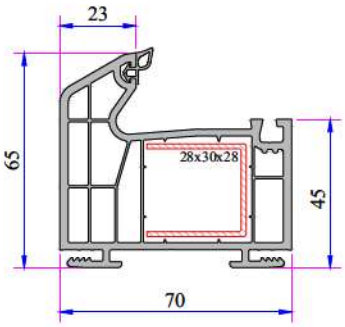

Renovation Frame Profile
45 mm
900.1008

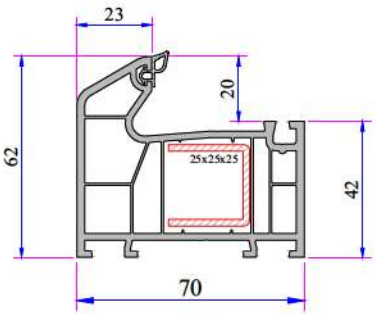

Frame Profile 42 mm
706.1000

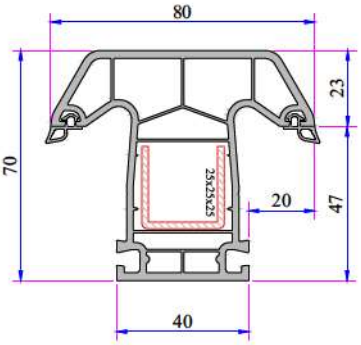

Mullion Profile for Frame 40 mm
706.3000

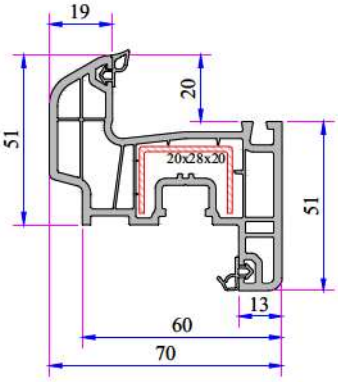

Offset Type Sash Profile
51 mm
900.2200

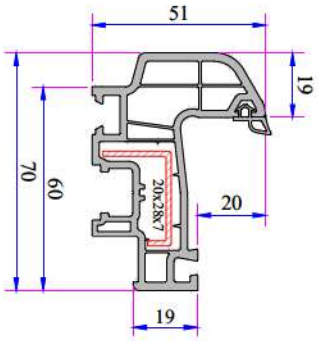

Integrated Lap Joint
Profile for Sash
900.2202

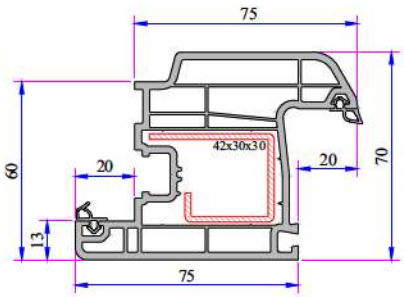

Door Sash Profile 75 mm
900.2009

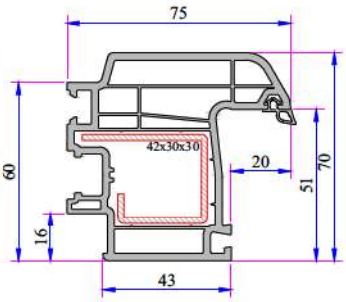

Integrated Lap Joint Profile for
Door
900.2010

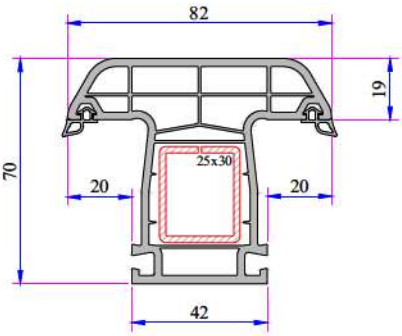

Mullion Profile for Sash
42 mm
900.3004

FR 60 Serie Profiles

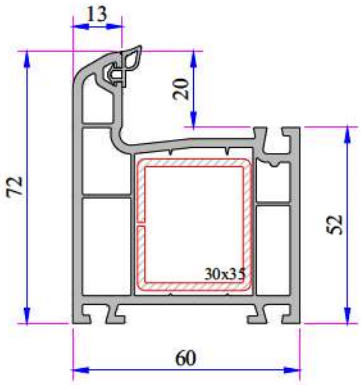

Super Frame Profile 52 mm
900.1001

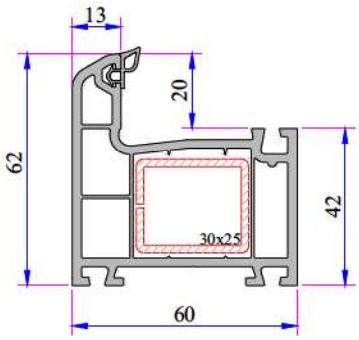

Frame Profile 42 mm
900.1000

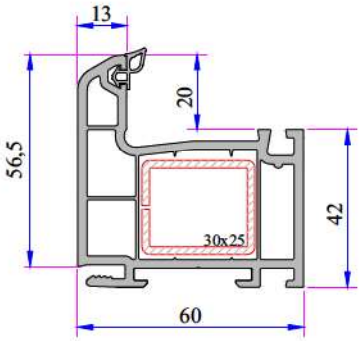

Renovation Frame Profile 42 mm
900.1006

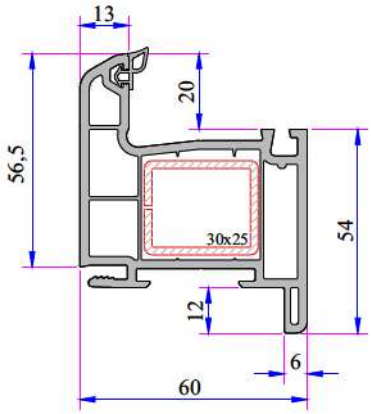

Renovation Frame Profile
with sill 12 mm
900.1005

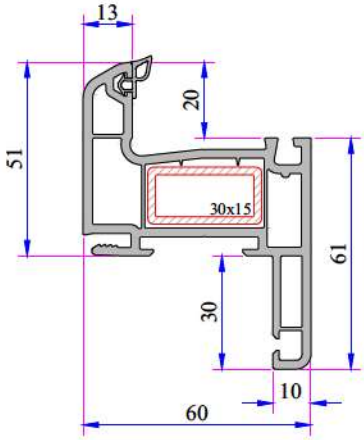

Renovation Frame Profile with sill
30 mm
900.1203

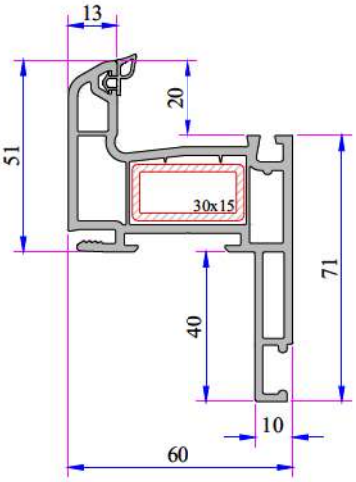

Renovation Frame Profile with sill
40 mm
900.1204

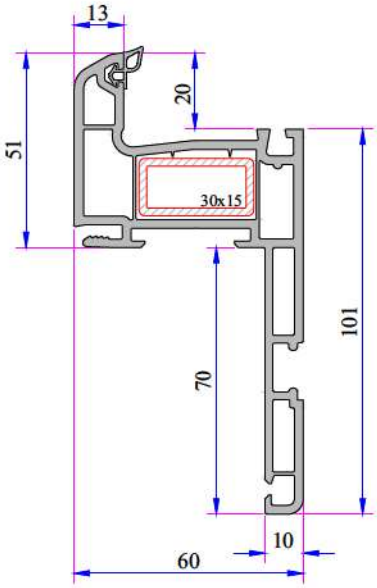

Renovation Frame Profile with sill
70 mm
900.1205

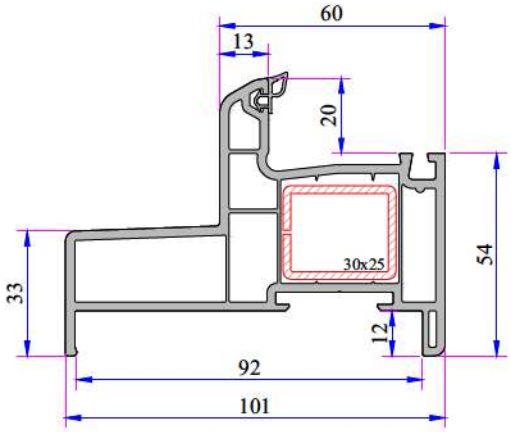

Monoblock Frame Profile 100 mm
900.1300

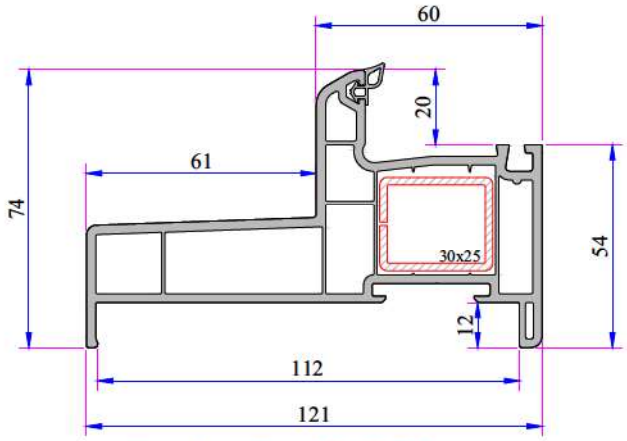

Monoblock Frame Profile 120 mm
900.1301

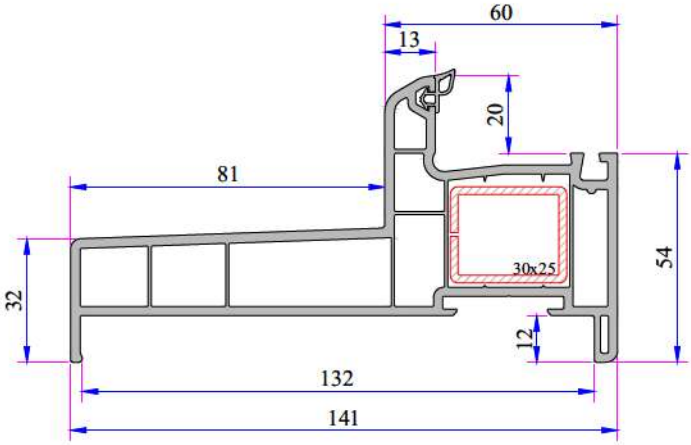

Monoblock Frame Profile 140 mm
900.1302

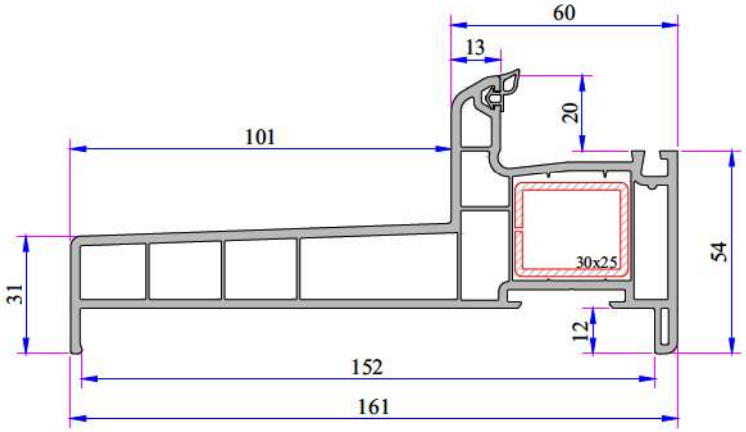

Monoblock Frame Profile 160 mm
900.1303

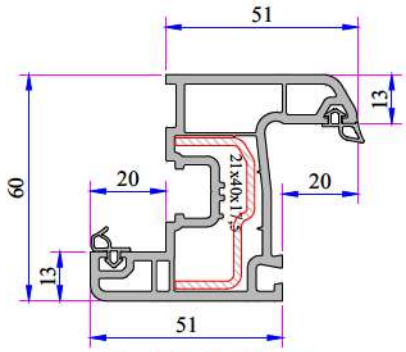

Sash Profile 51 mm
900.2005

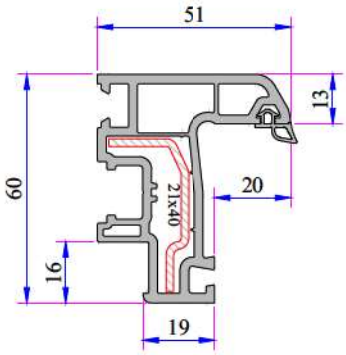

Offset Type Sash Lap Joint Profile
900.2006

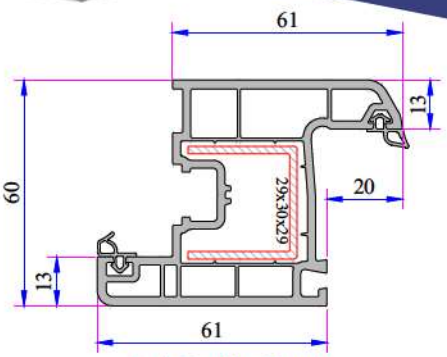

Sash Profile 61 mm
632.2000

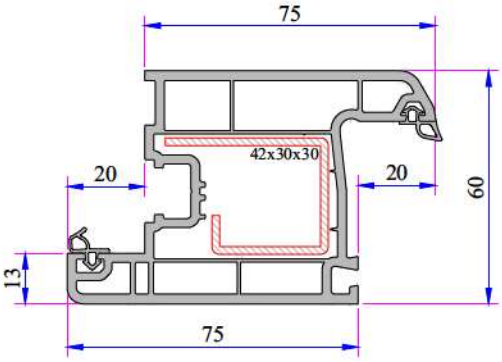

Eco Door Sash Profile 75 mm
900.2107

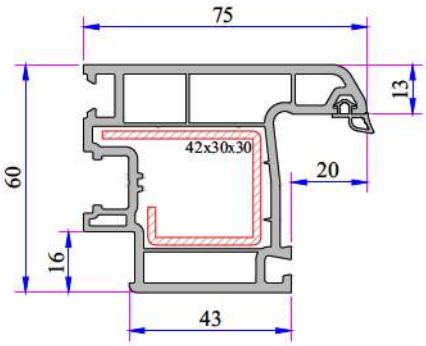

Offset Type Door Lap Joint Profile
900.2008

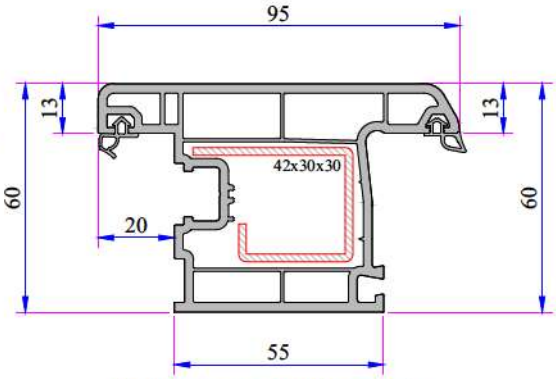

Outward Opening Door Sash Profile 55 mm
900.2101

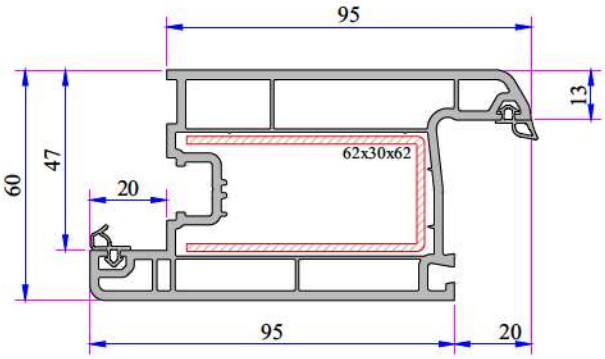

Door Sash Profile 95 mm
900.2100

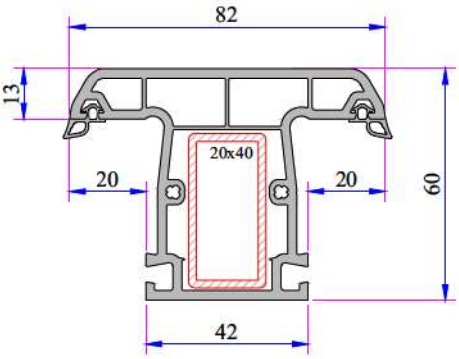

Static Mullion Profile 42 mm
900.3003

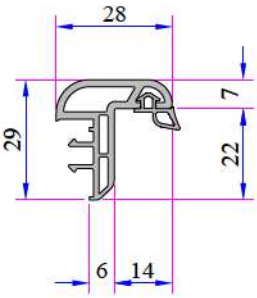

Lap Joint Outside Cover Profile
900.3100

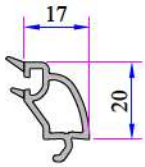

Double Glazing Bead for 24mm
900.4206

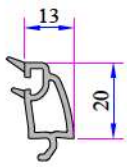

Double Glazing Bead for 28mm
900.4306

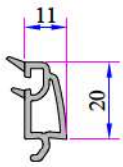

Double Glazing Bead for 30mm
900.4406

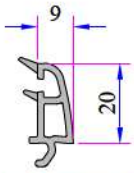

Double Glazing Bead for 32mm
900.4506

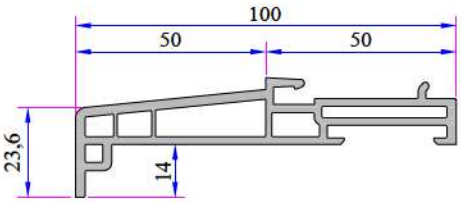

Outside Sill Profile 50 mm for Renovation Frame
900.6301

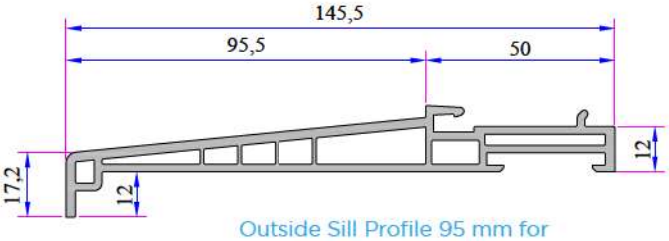

Outside Sill Profile 95 mm for Renovation Frame
900.6300

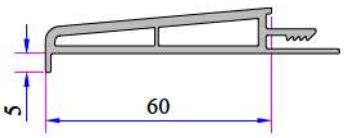

Outside Sill Profile 60 mm for Renovation Frame
706.5528

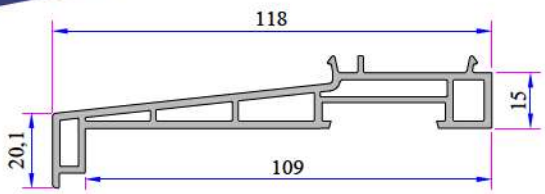

Sill Profile 58mm
058.5504

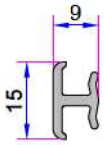

Universal Short Coupling Profile
099.5004

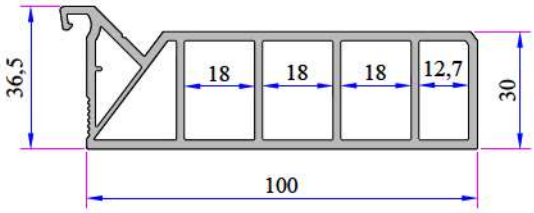

Frame Top Sill Profile 100mm
900.6308

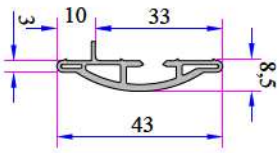

Lap Joint Inside Cover Profile 43 mm for Sash
900.6303

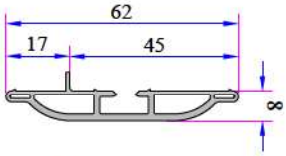

Lap Joint Inside Cover Profile 62 mm for Door
900.6302

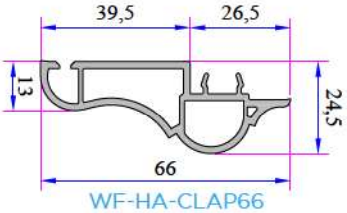

WF-HA-CLAP66
Habillage à clipper 66 mm sur l'aile de 40 mm du dormant
900.6305

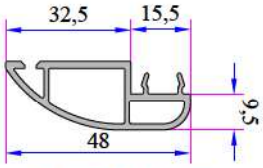

WF-HA-CLAP48
Habillage à clipper 48 mm sur l'aile de 40 mm du dormant
900.6304

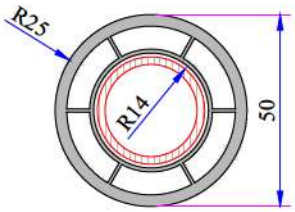

Pipe Profile
050.5106

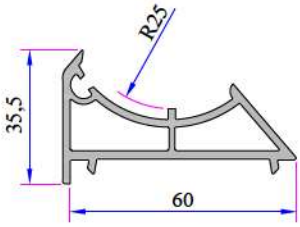

Angle Pipe Adaptor Profile
060.5104

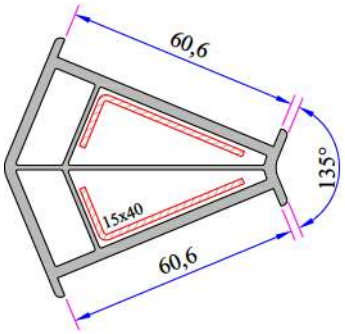

135° Corner Profile
060.5102

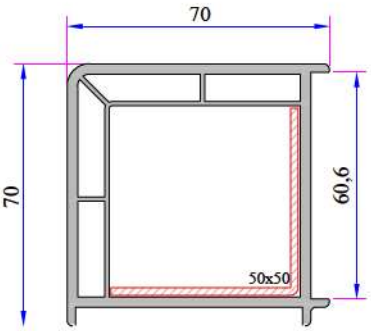

90° Corner Profile
060.5100

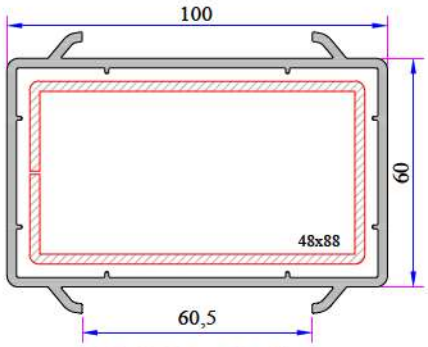

60x100 Box Profile
060.5203 0

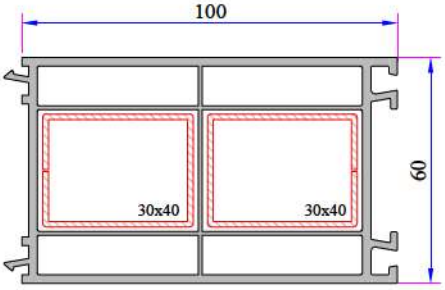

Frame Lifting Profile 100mm
900.5303

Uni. Large Coupling Cover Profile
058.5707

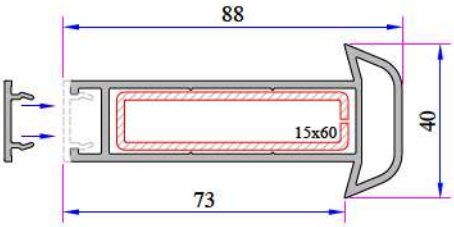

Universal Large Coupling Profile
058.5000

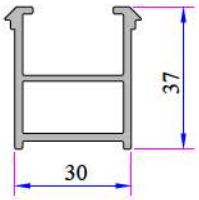

Frame Montage Profile
060.5301

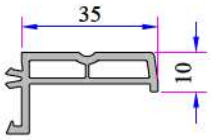

Frame Sill 35mm
099.5523

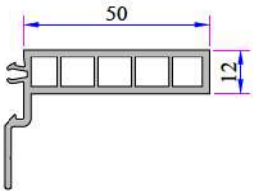

Frame Sill 50mm
099.5524

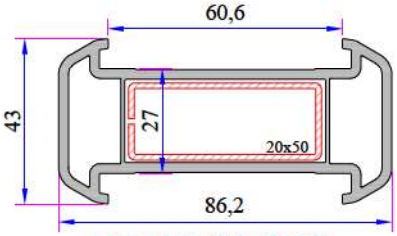

Large Coupling Profile
060.5000

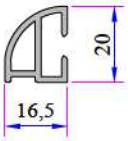

Offset Profile
900.6307

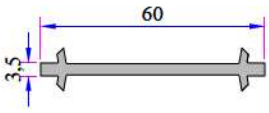

Narrow Coupling Profile
060.5001

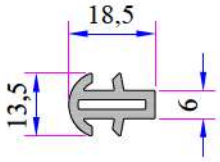

Short Coupling Profile
099.5003

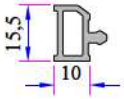

WF-HA-EPAI10
Habillage d'epaisseur 10 mm à clipser derrière l'aile rèno
900.6306

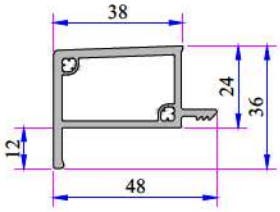

Expansion Sill Profile 38mm
900.5529

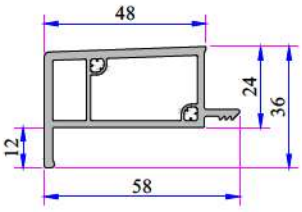

Expansion Sill Profile 48mm
900.5530

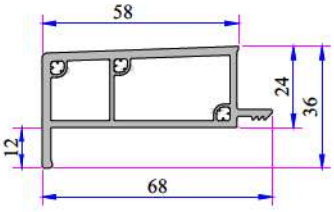

Expansion Sill Profile 58mm
900.5531

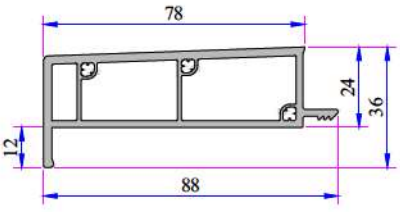

Expansion Sill Profile 78mm
900.5532

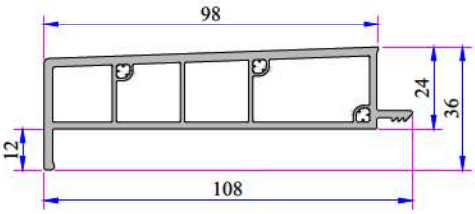

Expansion Sill Profile 98mm
900.5533

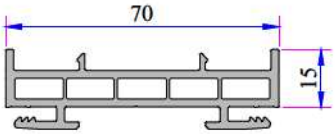

Attached Frame Lifting
Profile 15mm
900.5305

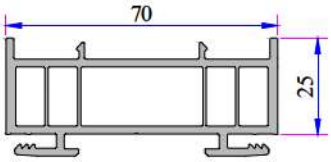

Attached Frame Lifting
Profile 25mm
900.5307

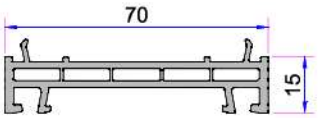

Frame Lifting Profile 15mm
070.5304

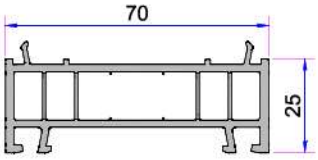

Frame Lifting Profile 25mm
070.5306

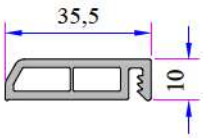

Outboard Sill Profile 35.5mm
900.5535

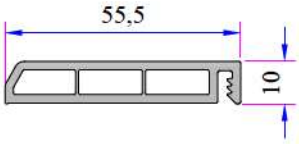

Outboard Sill Profile 55.5mm
900.5534

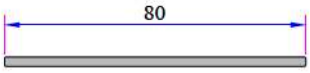

Cover Profile 80mm
099.5541

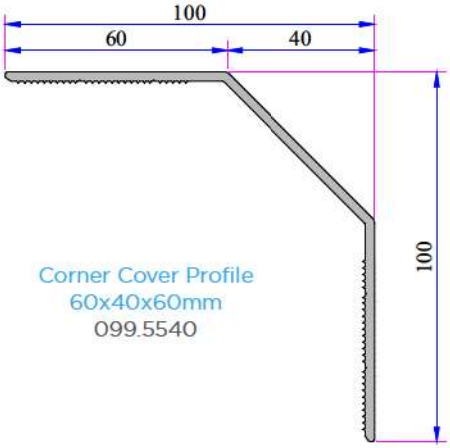

Corner Cover Profile
60x40x60mm
099.5540

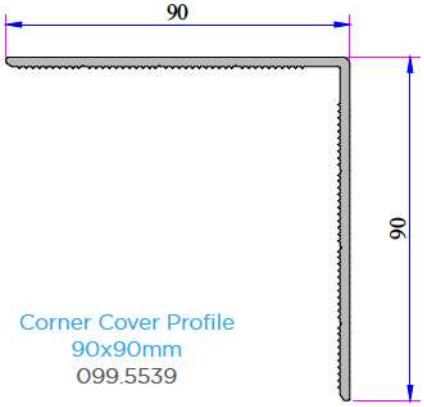

Corner Cover Profile
90x90mm
099.5539

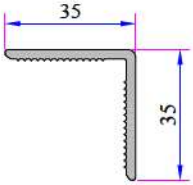

Corner Cover Profile
35x35mm
099.5536

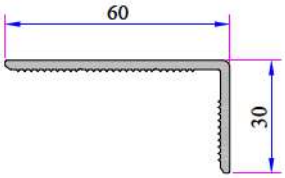

Corner Cover Profile
60x30mm
099.5538

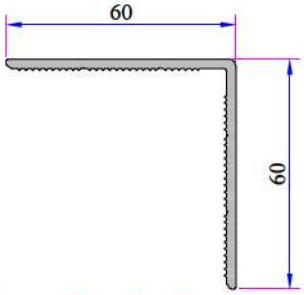

Corner Cover Profile
60x60mm
099.5537

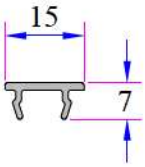

WF-HA-DR4070
Habillage pour aile de 40 ou 70 mm

900.5705

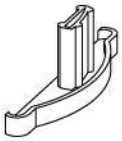

WF-BO-INT043
Bouchon pour battue intèrieure de 43mm
34012-10170

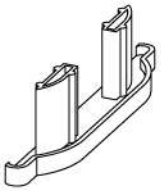

WF-BO-INT043
Bouchon pour battue intèrieure de 43mm
34012-10180

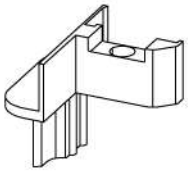

WF-BO-INT043
Bouchon pour battue intèrieure de 43mm
34012-10160

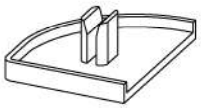

WF-BO-REJ020
Bouchon pour rejet d'eau de 20mm
34026-14090

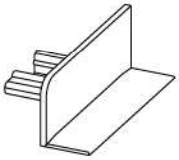

WF-BO-BATINT
Bouchon pour battement intègrè d'ouvrant
34012-10190

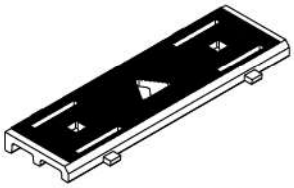

WF-CA-VITR60
Cale de vitrage de 60
34014-13070

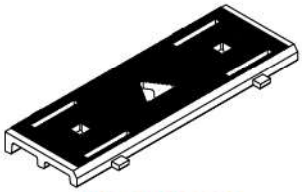

WF-CA-VITR70
Cale de vitrage de 70
34014-13080

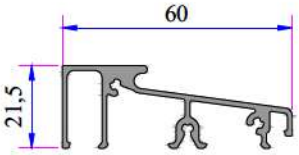

Seuiller Aluminium
AD16-001

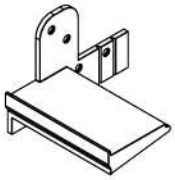

Connecteur Seuiller Aluminium
34007-15010

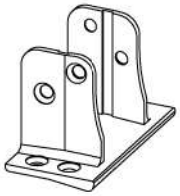

WF-AC-70L082
Etrier mètallique de 70
34007-11150

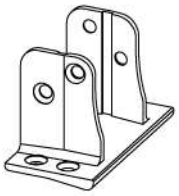

WF-AC-60L082
Etrier mètallique de 60
34007-11140

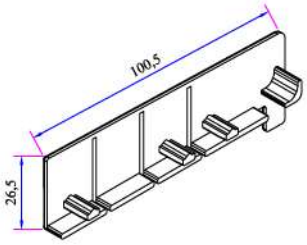

WF-BO-DMIsO160
Bouchon pour dormant monobloc

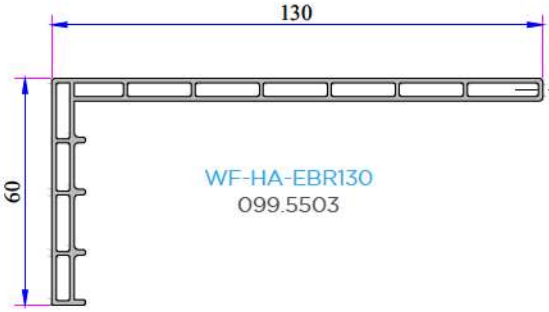

WF-HA-EBR130
099.5503

WF-RA-EBRAS1
099.5520

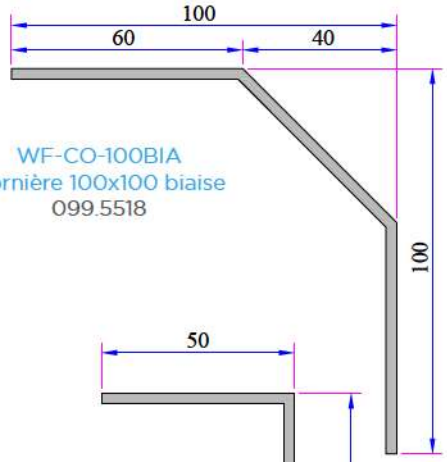

WF-CO-100BIA
Cornière 100x100 biaise
099.5518

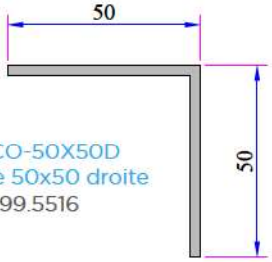

WF-CO-50X50D
Cornière 50x50 droite
099.5516

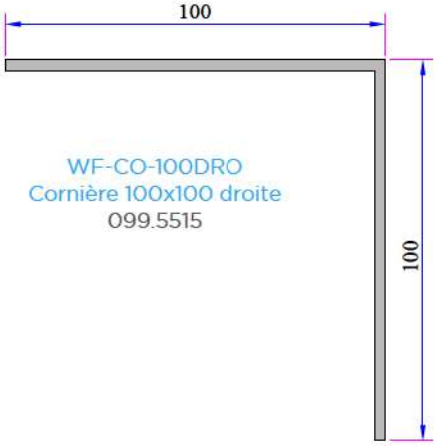

WF-CO-100DRO
Cornière 100x100 droite
099.5515

WF-CO-100X60
Cornière 100x60 droite
099.5514

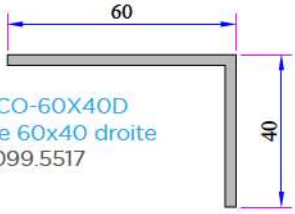

WF-CO-60X40D
Cornière 60x40 droite
099.5517

FR 60 Re-Inforcement Profiles

Profile	Reinforcement	Alternative Reinforcement
WF-DB-LAR072	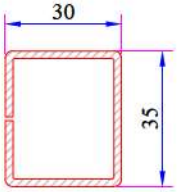 34022-12128	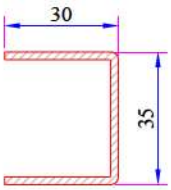 34022-12037
WF-DB-LAR062 WF-DB-VRIDM WF-DB-VRTDM WF-DM-IsO100 WF-DM-IsO120 WF-DM-IsO140 WF-DM-IsO160	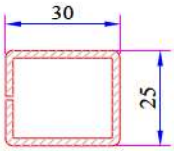 34022-12119	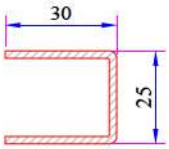 34022-12004
WF-DR-AILE30 WF-DR-AILE40 WF-DR-AILE70	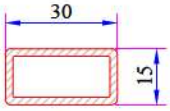 34022-12125	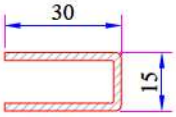 34022-12034
WF-OU-60L051 WF-OU-70L051	34022-12038 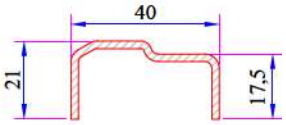	
WF-BA-60L051 WF-BA-70L051	34022-12307 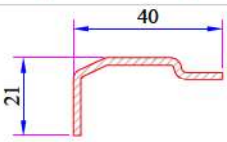	
WF-OU-60L075 WF-OU-60EX95 WF-BA-60L075 WF-OU-70L075 WF-BA-70L075	34022-12039 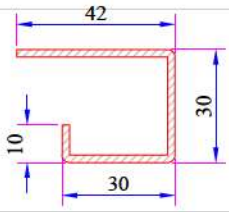	
WF-OU-60L095	34022-12029 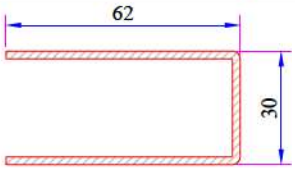	
WF-TR-60L082	34022-12114 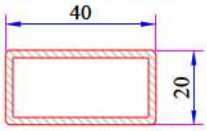	
WF-TR-70L082	34022-12119 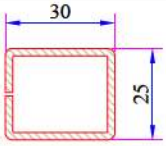	
WF-BA-70L051	34022-12040 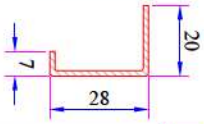	
135° Corner Profile Reinforcement	34022-12302 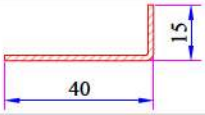	

Profile	Reinforcement
FR70 Frame Profile Reinforcement	34022-12041 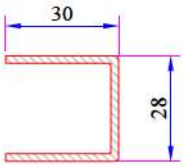
Mullion Profile Reinforcement	34022-12003 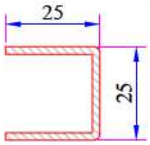
WF-OU-70L051	34022-12042 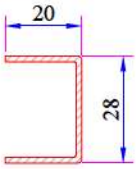
Lap Joint Profile Reinforcement	34022-12118 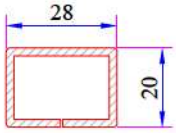
Large Couple Profile Reinforcement	34022-12105 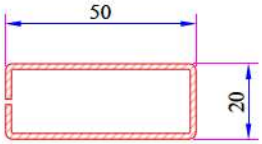
Universal Large Coupling Profile Reinforcement	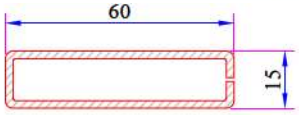 34022-12123
60x100m Box Profile Reinforcement	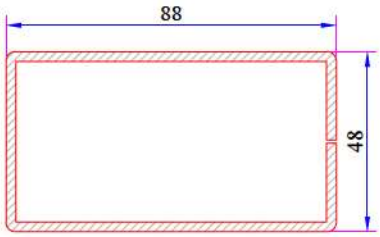 34022-12102
WF-RA-ELA100 Reinforcement	34022-12105 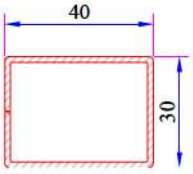
Angle Pipe Profile Reinforcement	34022-12503 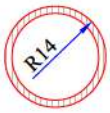
90° Corner Profile Reinforcement	34022-12302 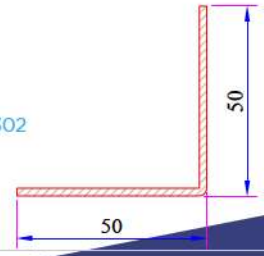

FR 60 Installation

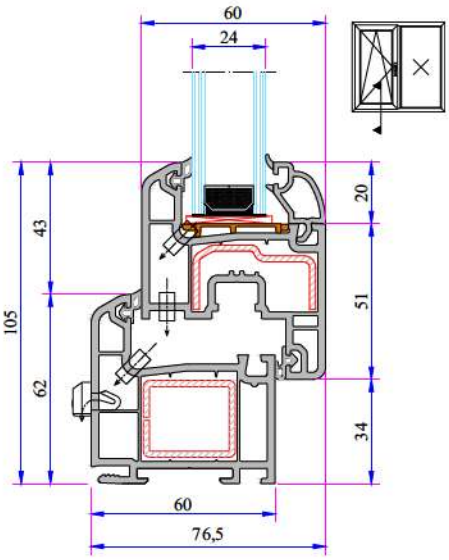

Frame - Narrow Sash Installation

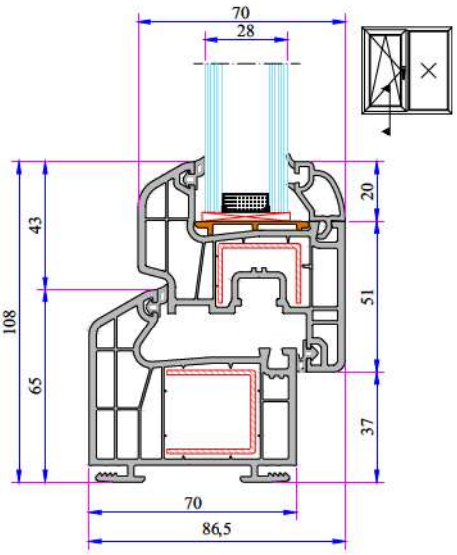

FR 70 Frame - Offset Type Sash Installation

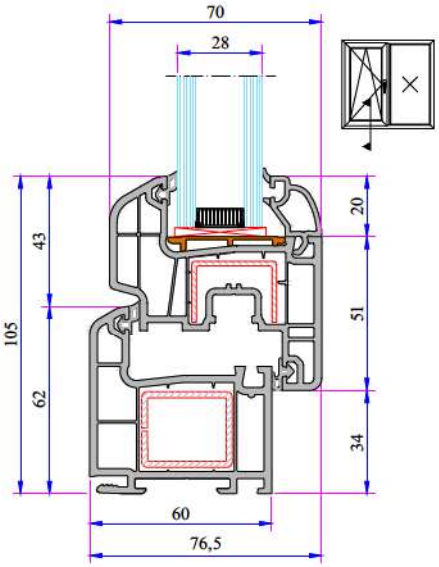

Frame - Offset Type Sash Installation

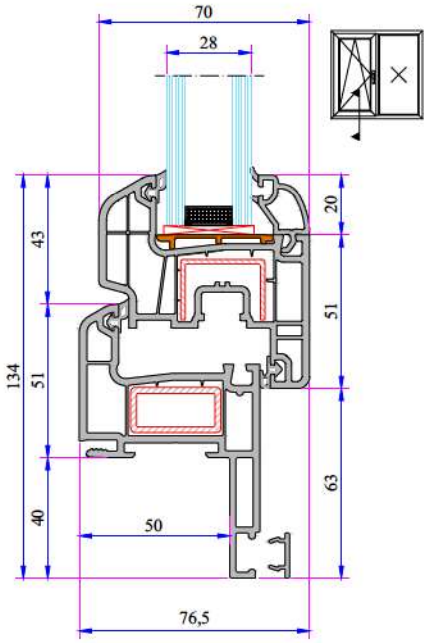

40mm Frame with Sill - Offset Type Sash Installation

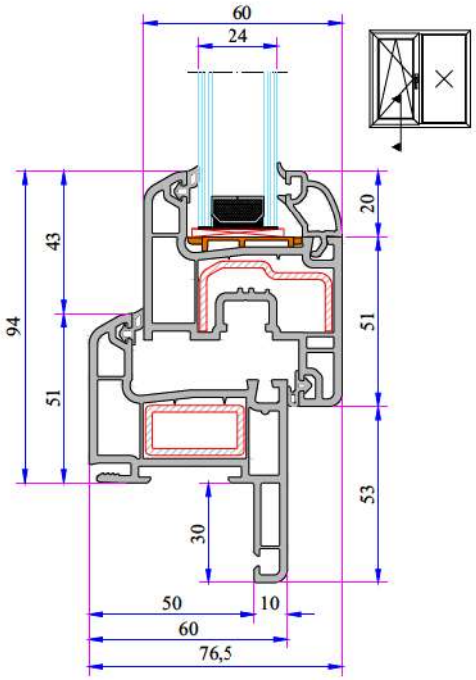

30mm Frame with Sill - Narrow Sash Installation

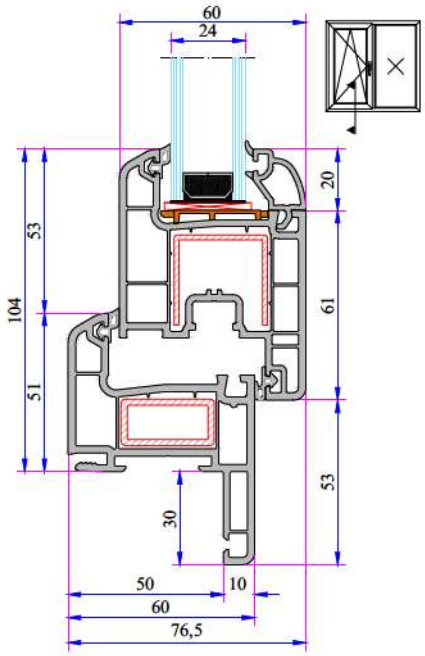

30mm Frame with Sill - Sash Installation

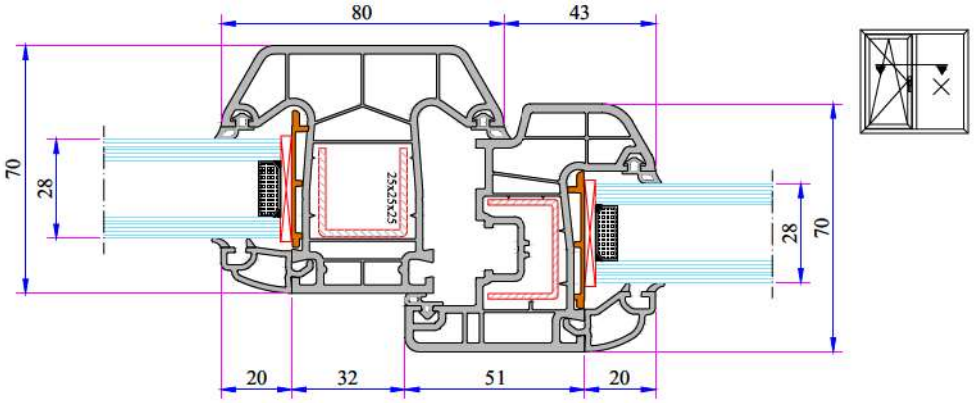

Mullion - Offset Type Sash Installation

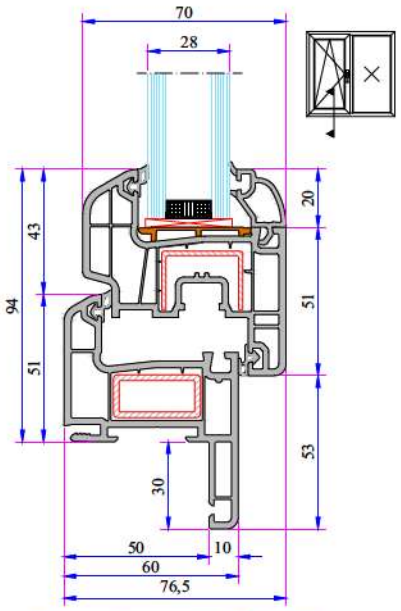

30mm Frame with Sill - Offset Type Sash Installation

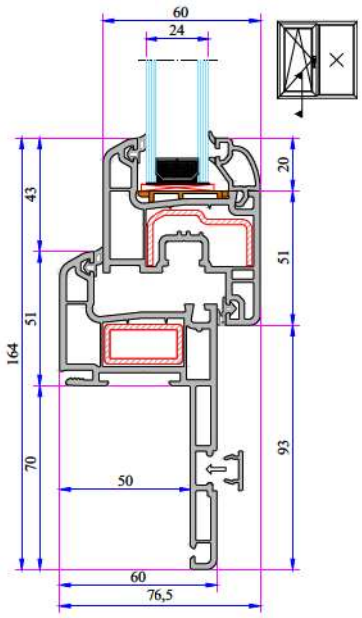

70mm Frame with Sill - Narrow Sash Installation

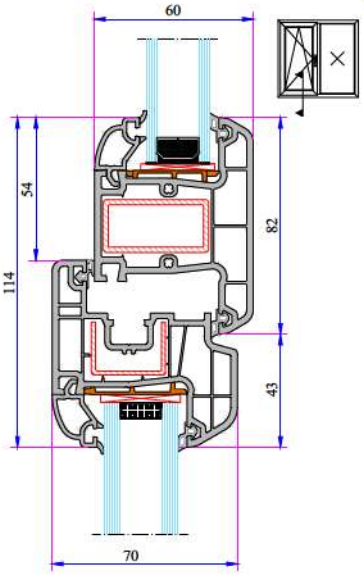

Offset Type Sash - Mullion Installation

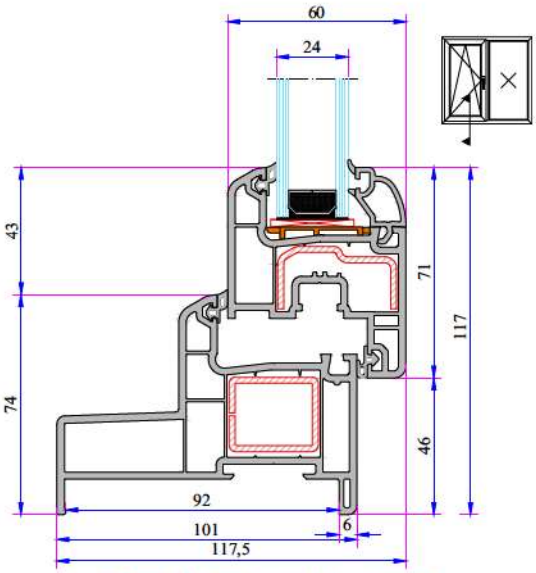

100mm Frame With Sill - Narrow Sash Installation

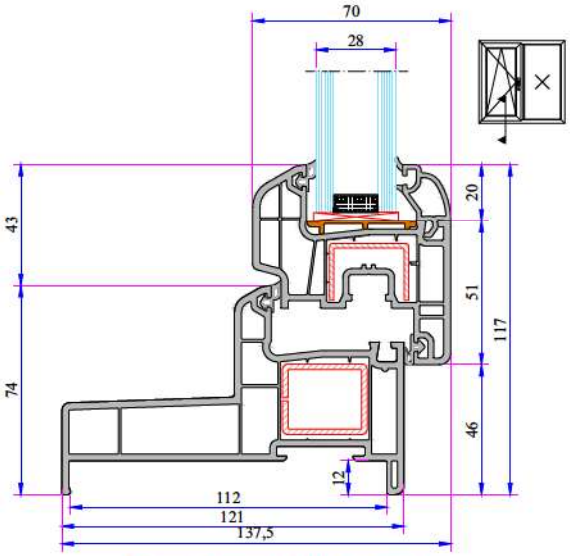

120mm Frame With Sill - Offset Type Sash Installation

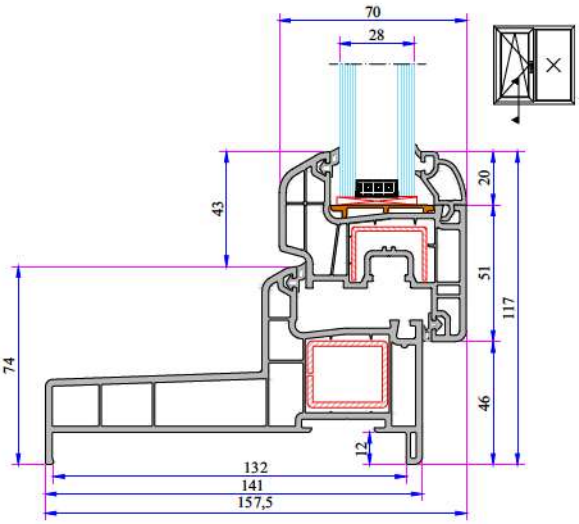

140mm Frame With Sill - Offset Type Sash Installation

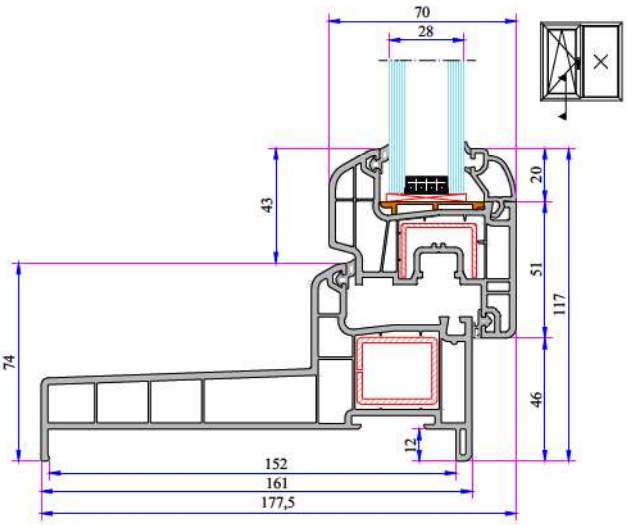

160mm Frame With Sill - Offset Type Sash Installation

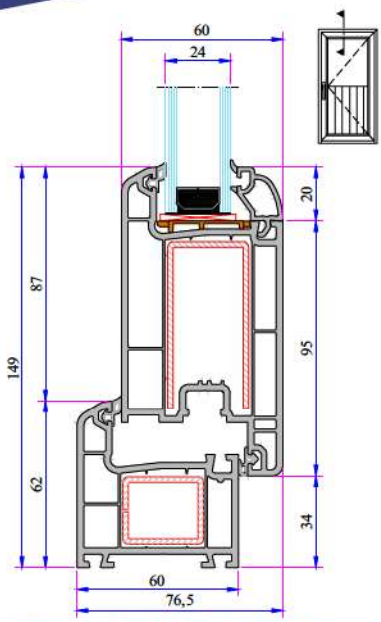

Frame - Door Sash Installation

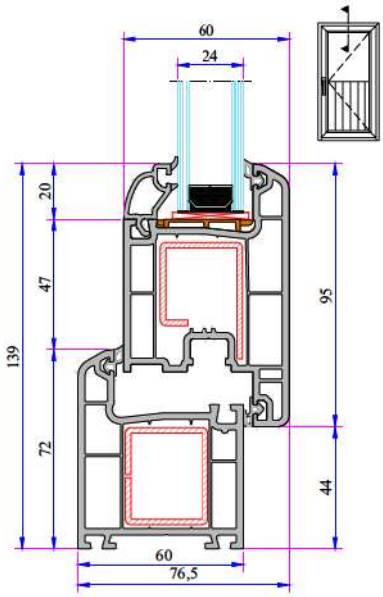

Super Frame - Outward Opening
Door Sash Installation

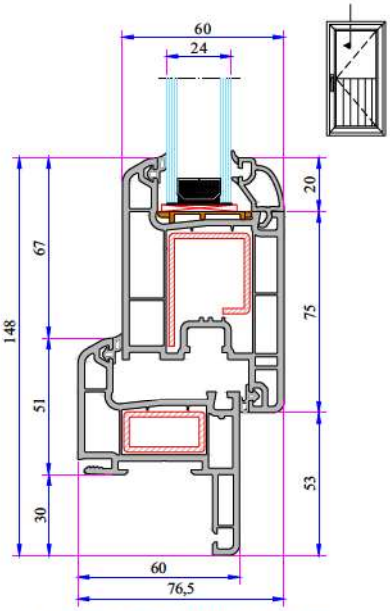

30mm Frame With Sill - Eco
Door Sash Installation

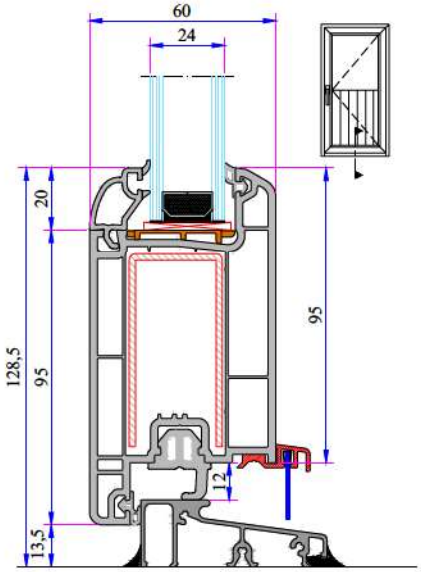

With Aluminium Threshold
Frame Door Sash Installation

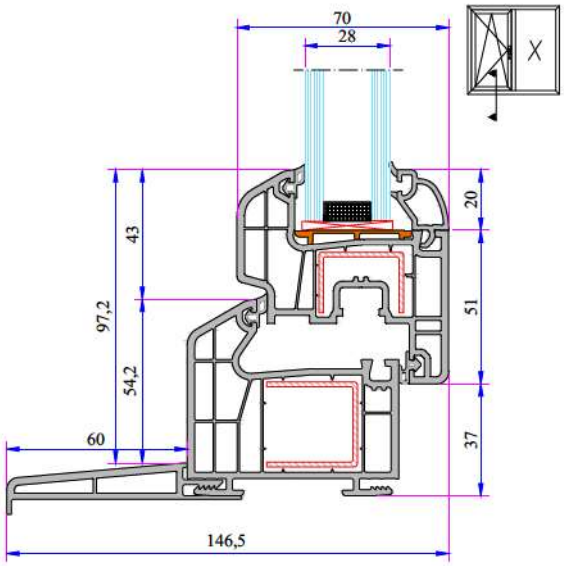

Sill Profile (60mm) Installation

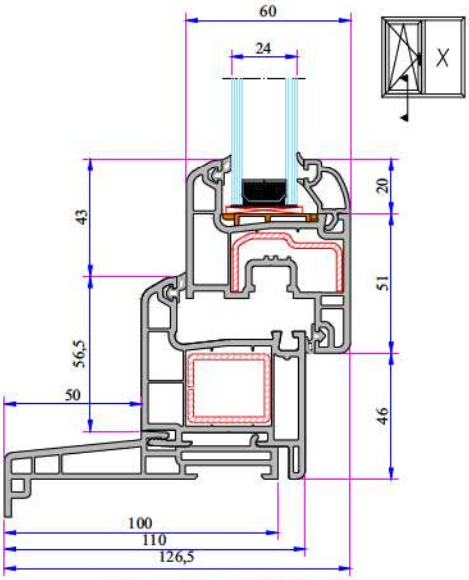

50mm Frame Sill Profile
Installation

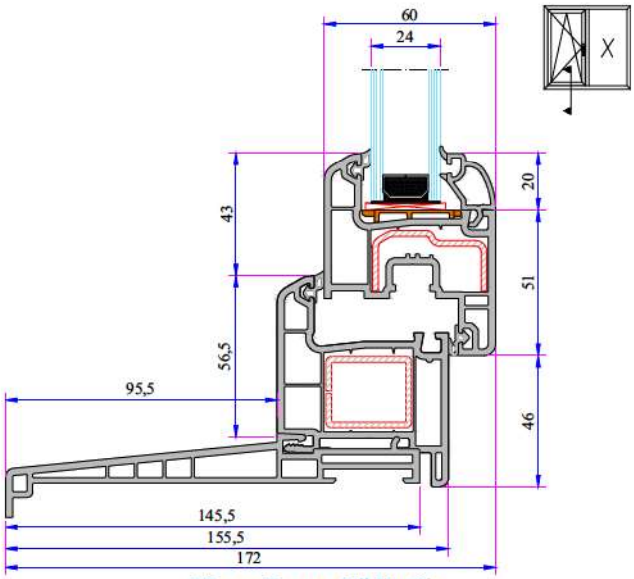

95mm Frame Sill Profile
Installation

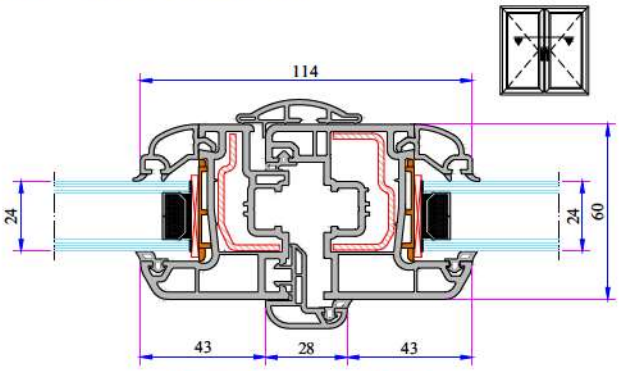

Narrow Sash - Lap Joint - Narrow Sash Installation

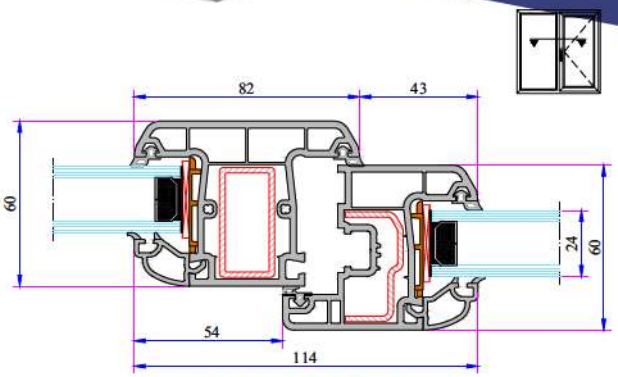

Narrow Sash - Mullion Profile Installation

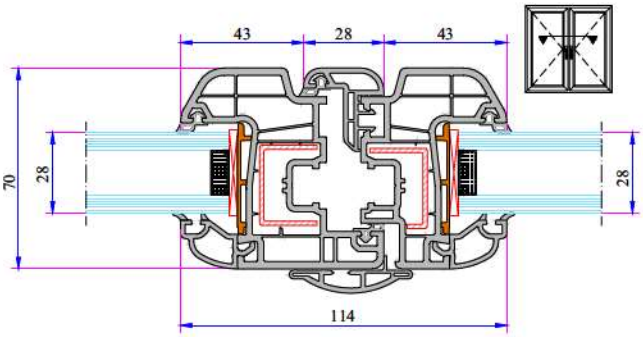

Offset Type Sash - Lap Joint - Offset Type Sash Installation

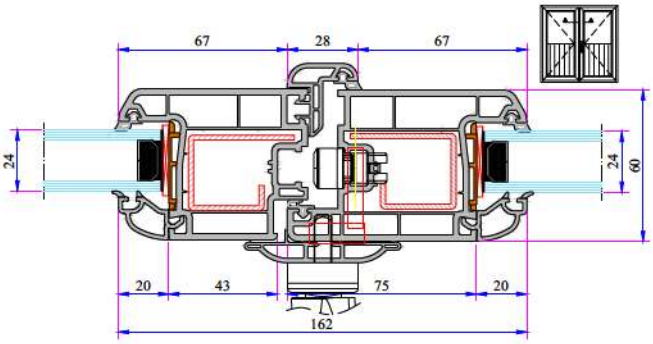

Door Sash - Lap Joint - Half Door Sash Installation

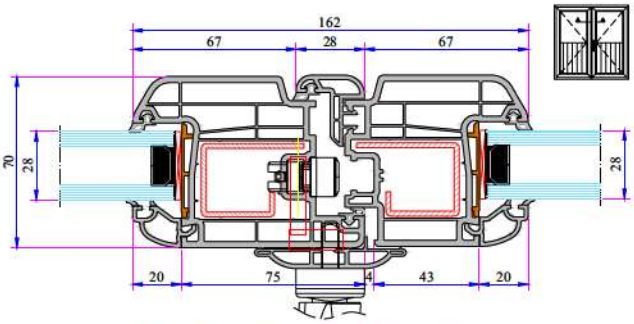

Offset Type Door Sash - Lap Joint - Offset Type Half Door Sash Installation

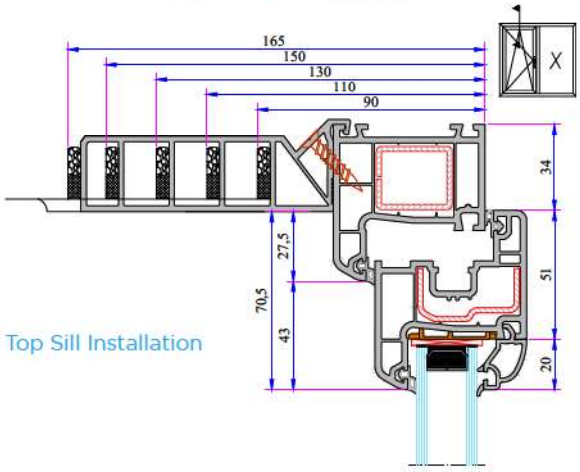

Frame Top Sill Installation

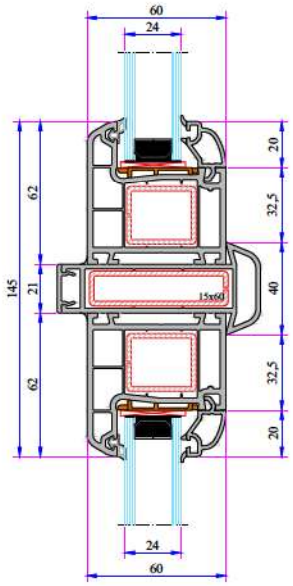

Universal Large Coupling Profile Installation

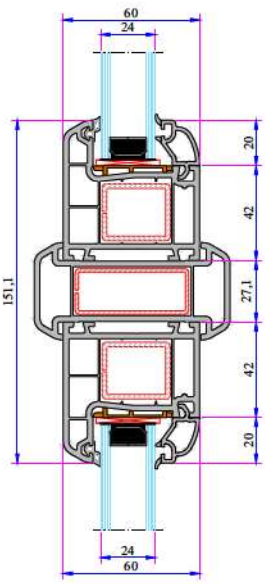

Large Coupling Profile Installation

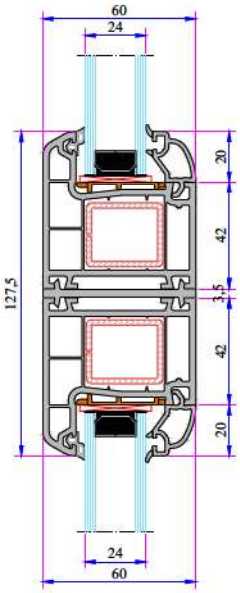

Narrow Coupling Profile Installation

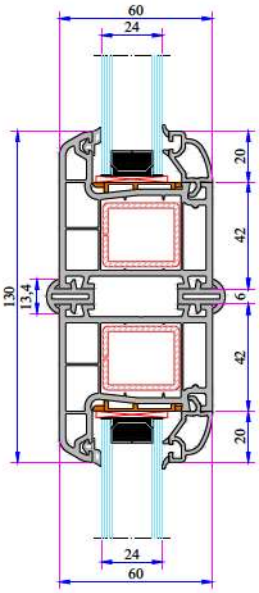

Short Coupling Profile Installation

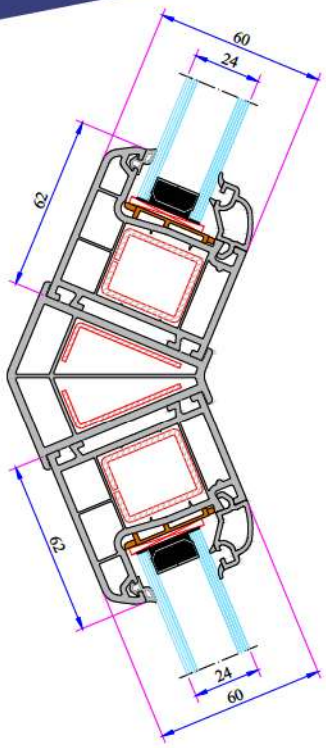

135° Corner Profile Installation

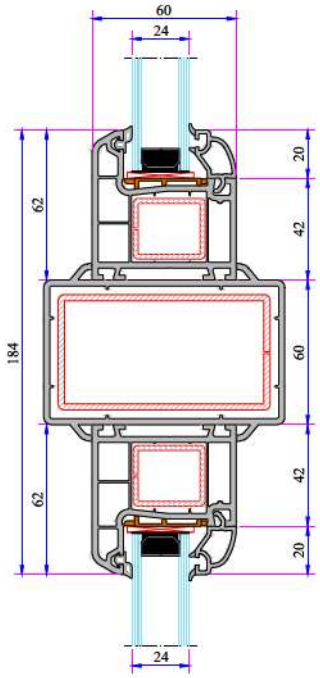

Box Profile Installation

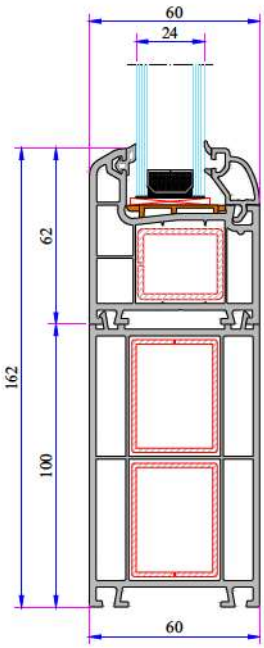

100mm Frame Lifting Profile Installation

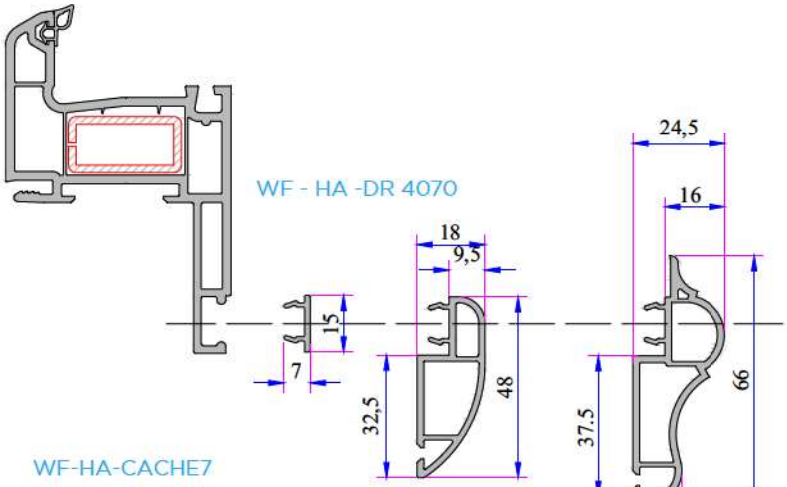

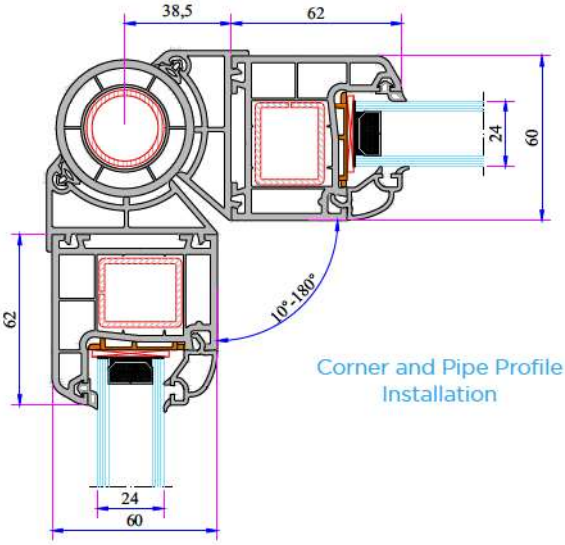

Corner and Pipe Profile Installation

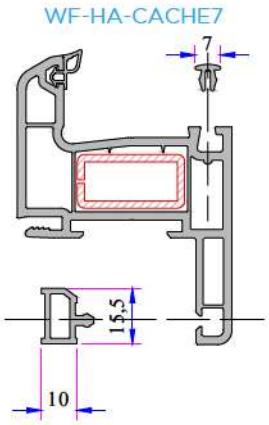

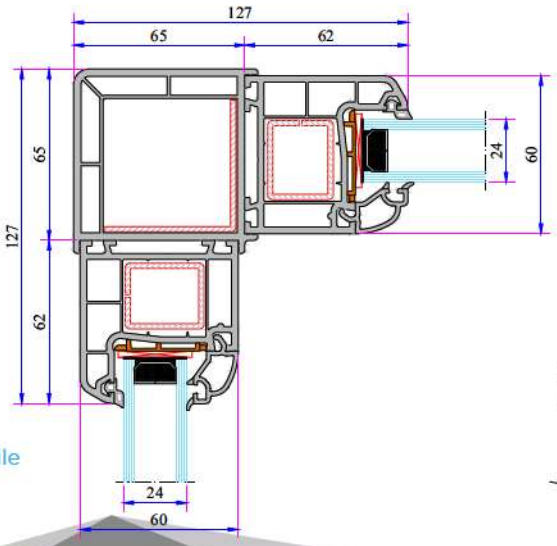

90° Corner Profile Installation

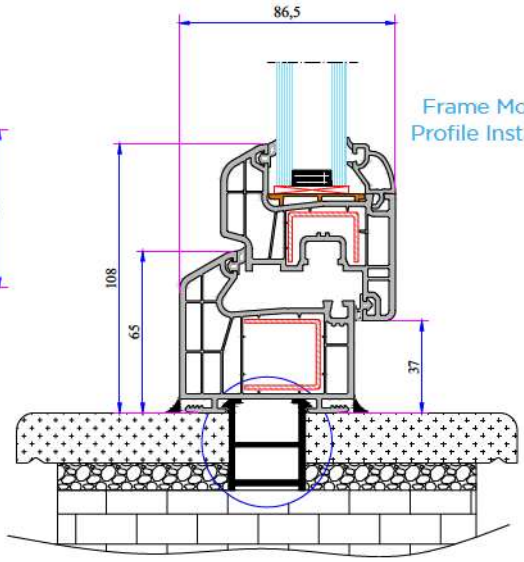

Frame Montage Profile Installation

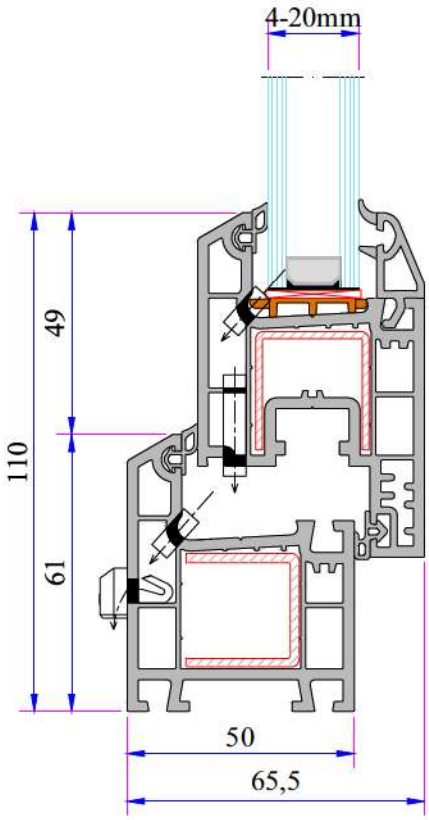

W 332 SERIESS

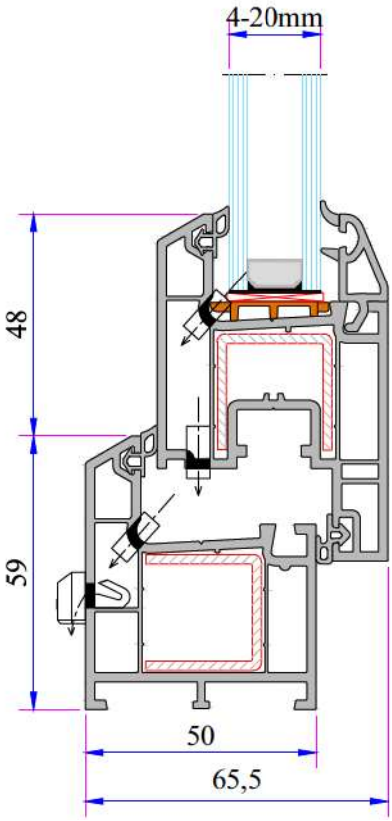

W 330 SERIESS

TECHNICAL

W 332 SERIES

Profile Width: 50 mm
Number of chambers: 3
Profile Class: B Class (TS EN 12608-1)
Seal Type: External / Internal double seal system
Seal Type and Color: TPE – Grey /Black
Glass Thickness (mm): 4, 20 mm

W 330 SERIES

Profile Width: 50 mm
Number of chambers: 3
Profile Class: C Class (TS EN 12608-1)
Seal Type: External / Internal double seal system
Seal Type and Color: TPE – Grey /Black
Glass Thickness (mm): 4, 20 mm

INSTRUCTION

· The main profile has 50 mm width.

· Because of the elastic grey and black seal which does not leave any stain on profiles will be provided maximum air, water, dust and sound isolation.

· Due to the 3 chambers profiles, it has maximum performance for thermal, sound and water isolation.

· In addition to white profile a different laminated color range is available.

· 4-5 mm single glazing application of 20 mm glazing bead give us alternatives of using double, triple glazing and panels.

W 332 Serie Profiles

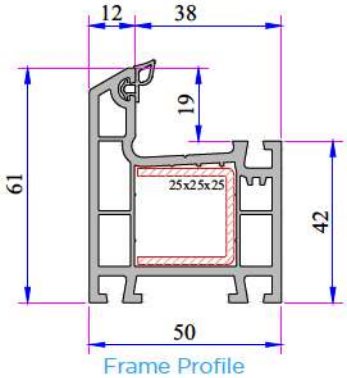

Frame Profile
332.1000

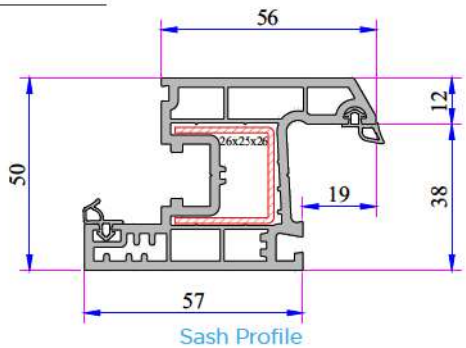

Sash Profile
332.2000

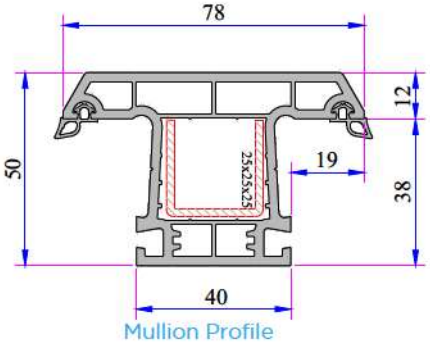

Mullion Profile
332.3000

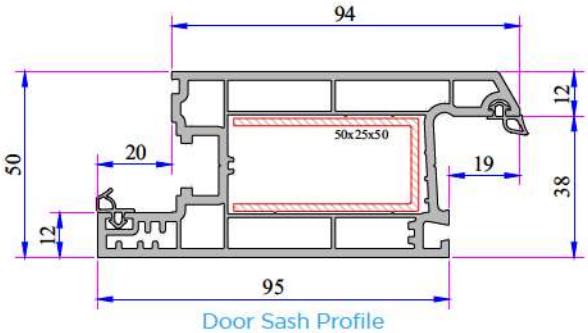

Door Sash Profile
332.2100

W 330 Serie Profiles

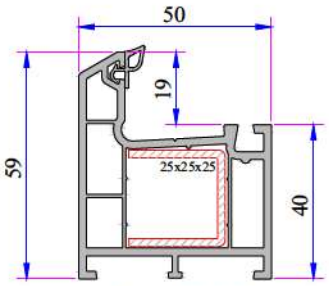

Frame Profile
330.1000

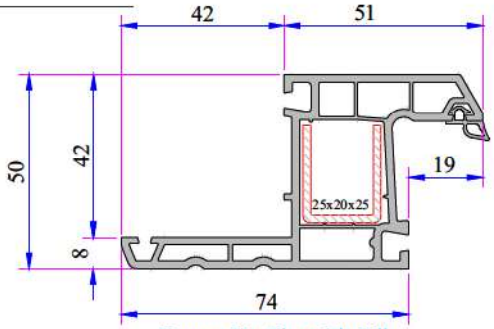

Frame Profile with Sill
330.1200

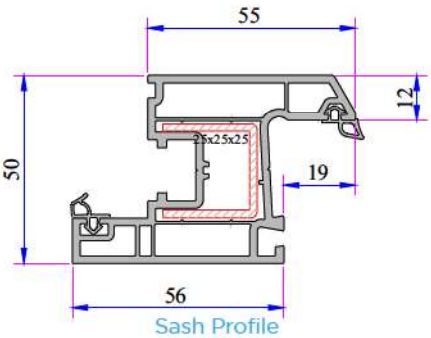

Sash Profile
330.2000

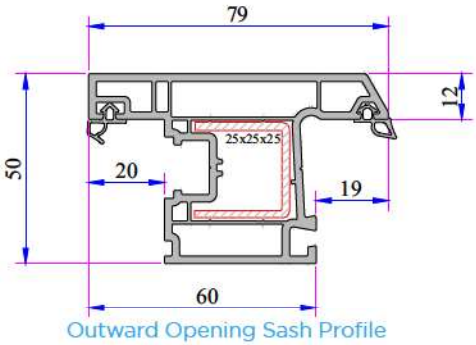

Outward Opening Sash Profile
330.2001

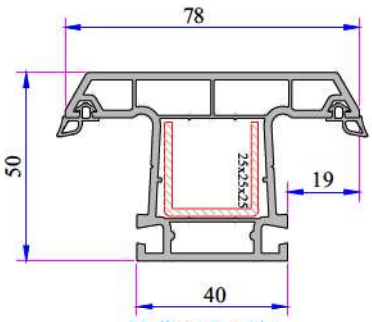

Mullion Profile
330.3000

W 330 - W 332 Serie Profile

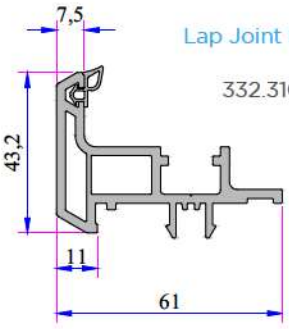

Lap Joint Profile

332.3100

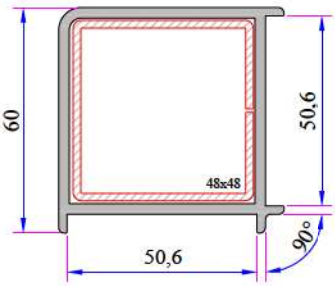

Corner Profile (90°)

050.5100

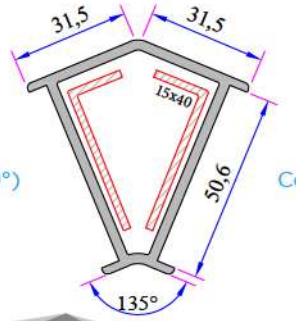

Corner Profile (135°)

050.5102

W 330 - W 332 Serie Profile

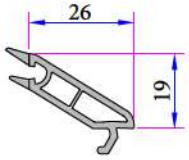

Single Glazing Bead 4mm
332.4000

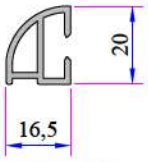

Offset Profile
900.6307

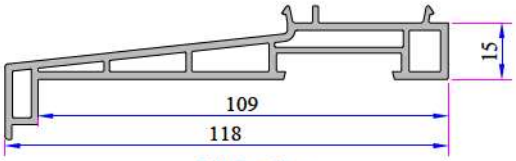

Sill Profile
058.5504

Universal Large Coupling Cover Profile
058.5707

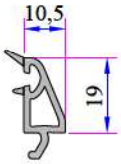

Double Glazing Bead 20mm
332.4100

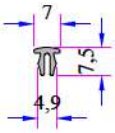

Frame Channel Cover Profile

099.5703

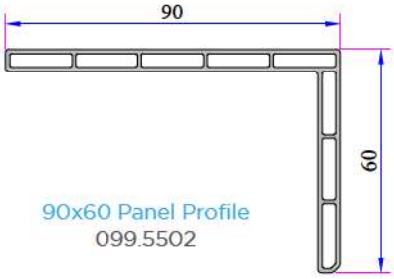

90x60 Panel Profile
099.5502

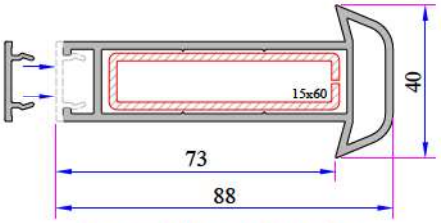

Universal Large Coupling Profile
058.5000

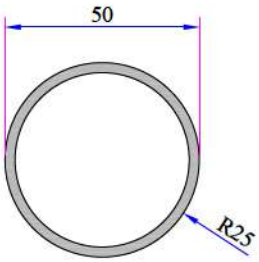

Angle Pipe Profile(Ø50)
050.5105

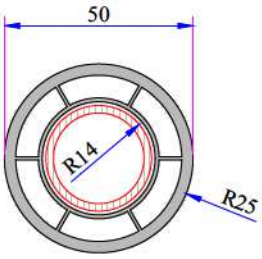

Angle Pipe Profile(Ø50)
050.5106

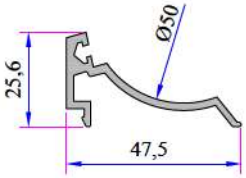

Alm. Angle Pipe Adaptor Profile
(In Process)

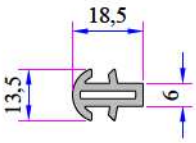

Short Coupling Profile
099.5003

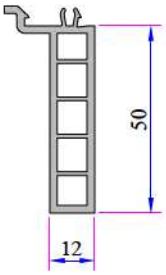

50mm Frame Sill Profile
099.5524

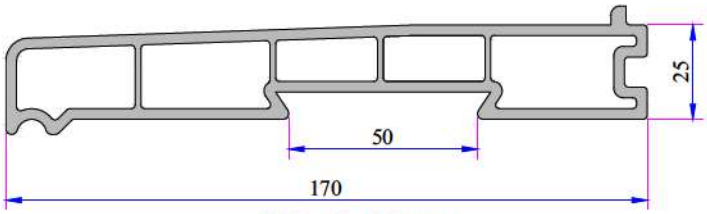

Sill Profile 170mm
099.5513

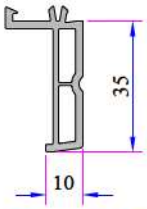

35mm Frame Sill Profile
099.5523

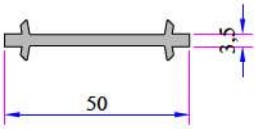

Narrow Coupling Profile 50mm
050.5001

W 332 - W 330 Re-Inforcement Profiles

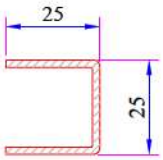

332 Frame - Mullion Profile Reinforcement
34022-12003

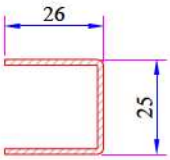

332 Sash Profile Reinforcement
34022-12003

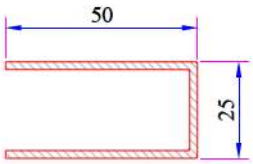

332 Door Sash Profile Reinforcement
34022-12012

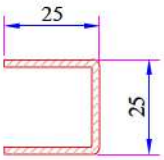

330 Frame - Sash - Mullion - Outward Opening Sash Profile Reinforcement
34022-12003

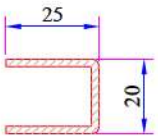

330 Frame With Sill Profile Reinforcement
34022-12021

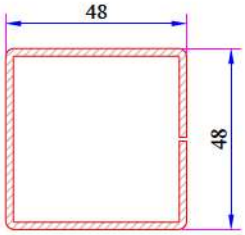

90° Corner Profile Reinforcement
34022-12102

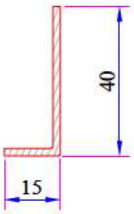

135° Corner Profile Reinforcement
34022-12301

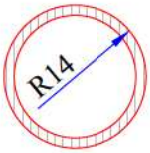

Pipe Profile Reinforcement
34022-12503

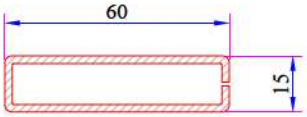

Universal Large Coupling Profile Reinforcement
34022-12123

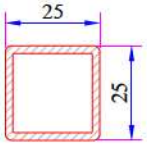

Mullion Profile Static Reinforcement
34022-12122

W 332 - W 330 Installation

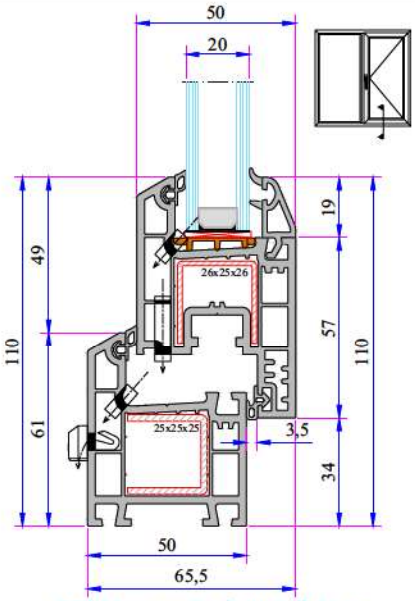

332 Frame - Sash Installation

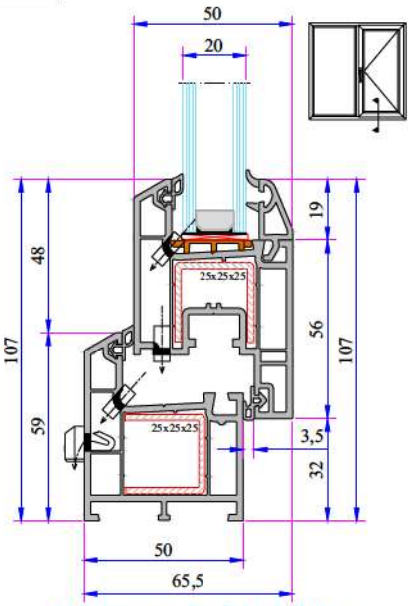

330 Frame - Sash Installation

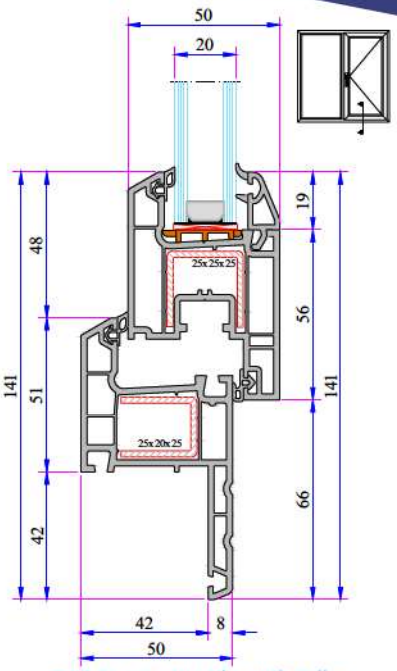

330 Frame Profile with Sill - Sash Installation

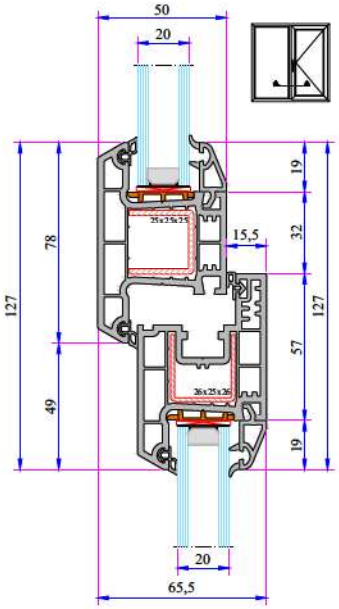

332 Mullion - Sash Installation

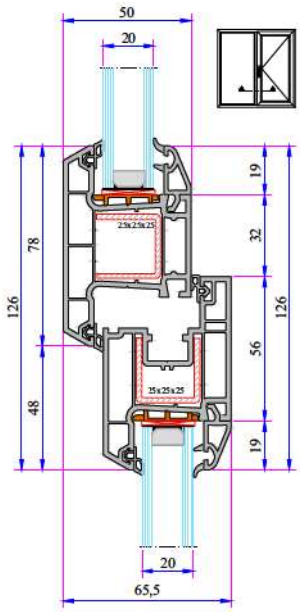

330 Mullion - Sash Installation

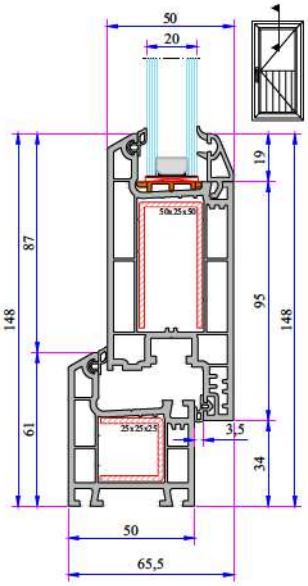

332 Frame - Door Sash Installation

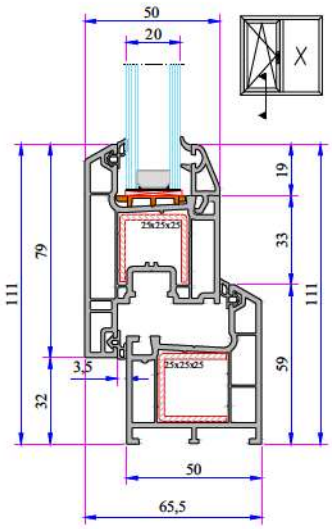

330 Frame - Outward Opening Sash Installation

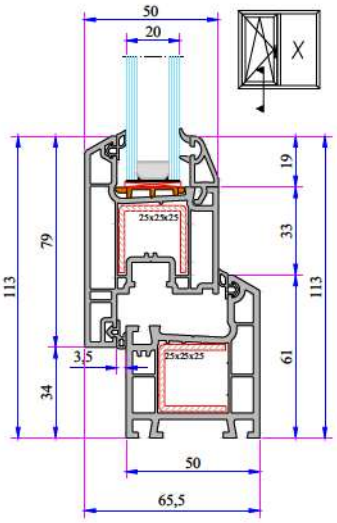

332 Frame - Outward Opening Sash Installation

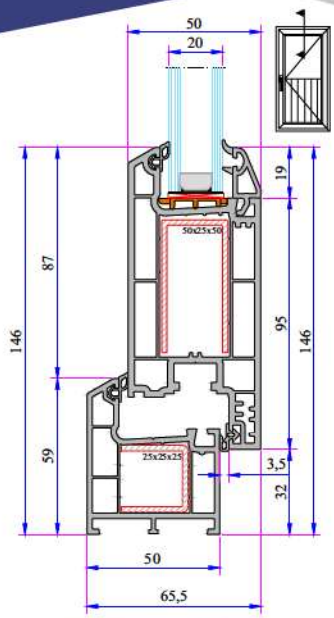

330 Frame - Door Sash Installation

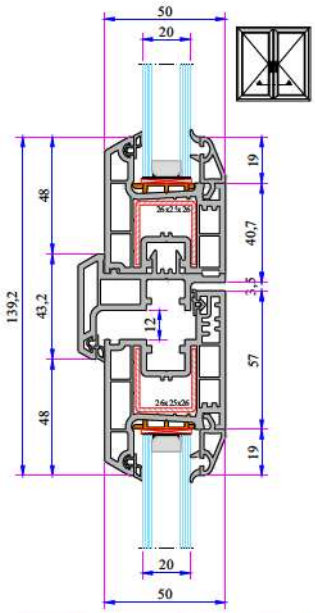

332 Sash - Lap Joint - Sash Installation

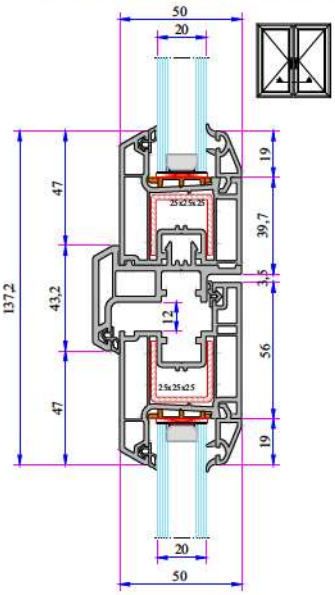

330 Sash - Lap Joint - Sash Installation

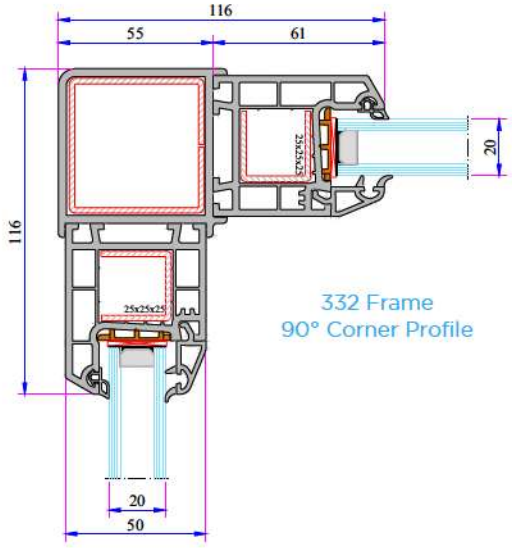

332 Frame
90° Corner Profile

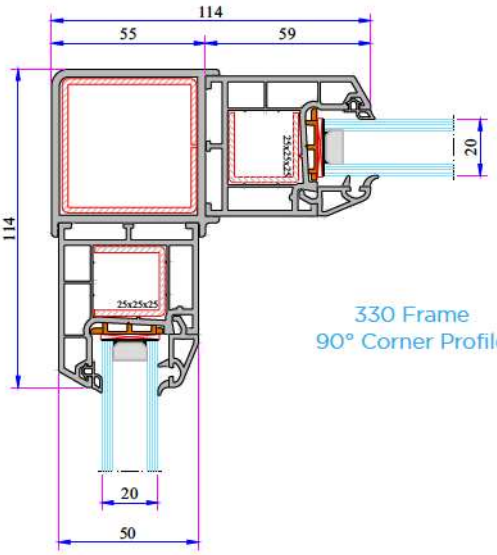

330 Frame
90° Corner Profile

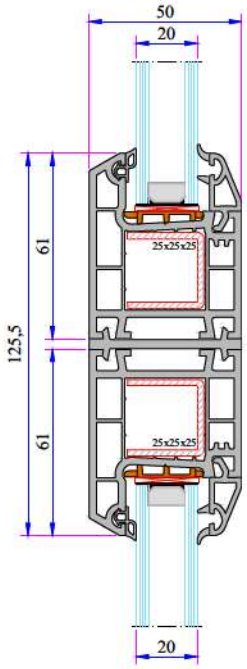

332 Frame - Narrow Coupling Profile

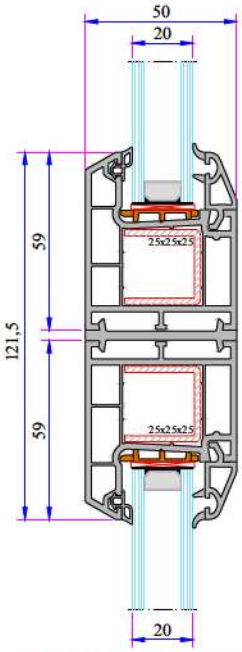

330 Frame - Narrow Coupling Profile

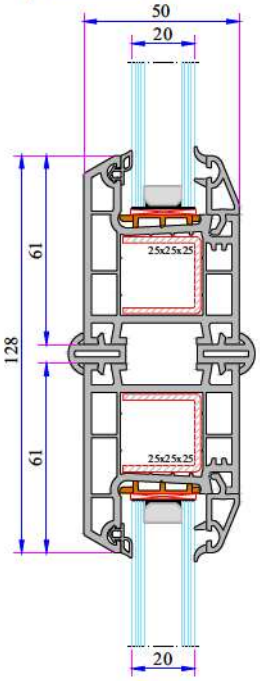

332 Frame - Short Coupling Profile

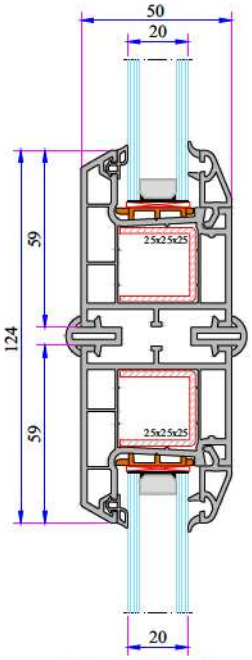

330 Frame - Short Coupling Profile

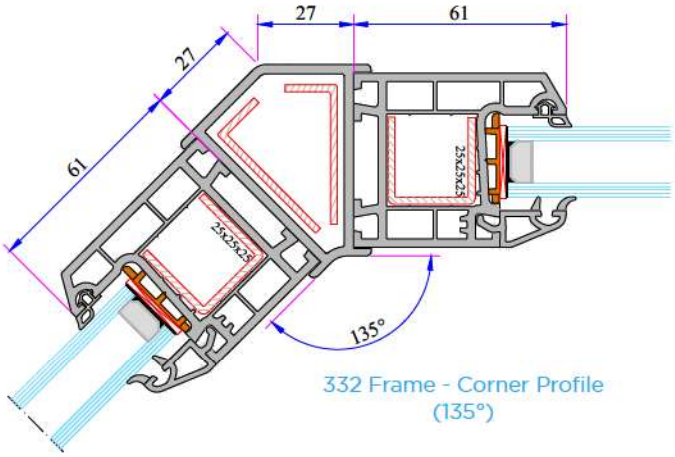

332 Frame - Corner Profile
(135°)

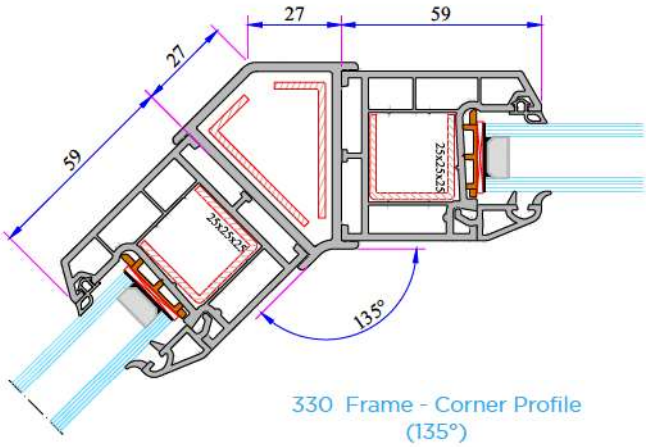

330 Frame - Corner Profile
(135°)

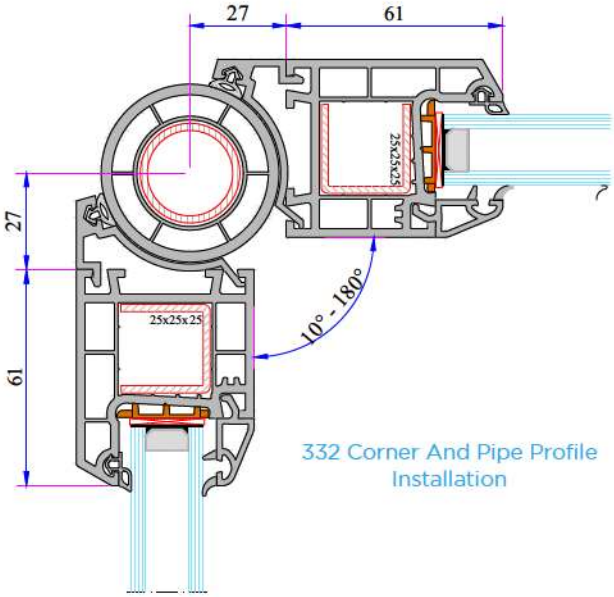

332 Corner And Pipe Profile
Installation

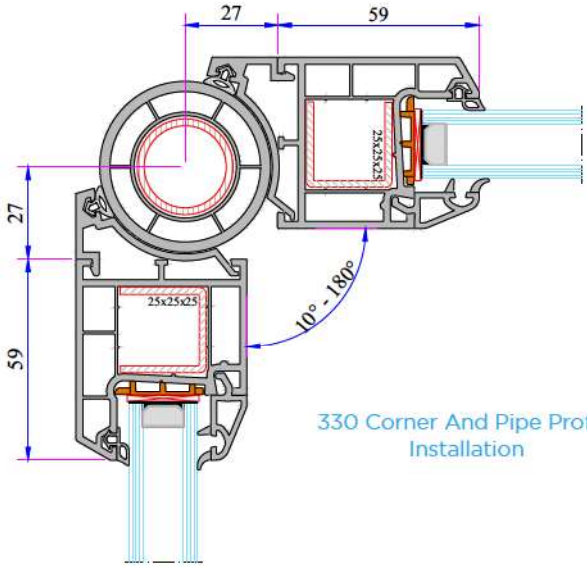

330 Corner And Pipe Profile
Installation

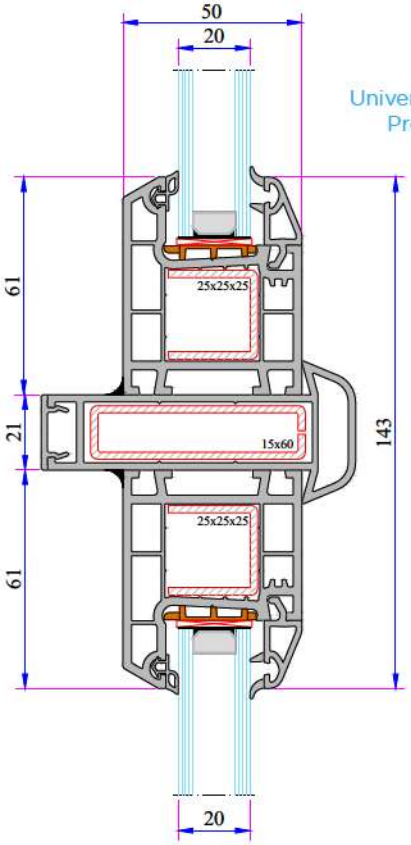

Universal Large Coupling
Profile Installation

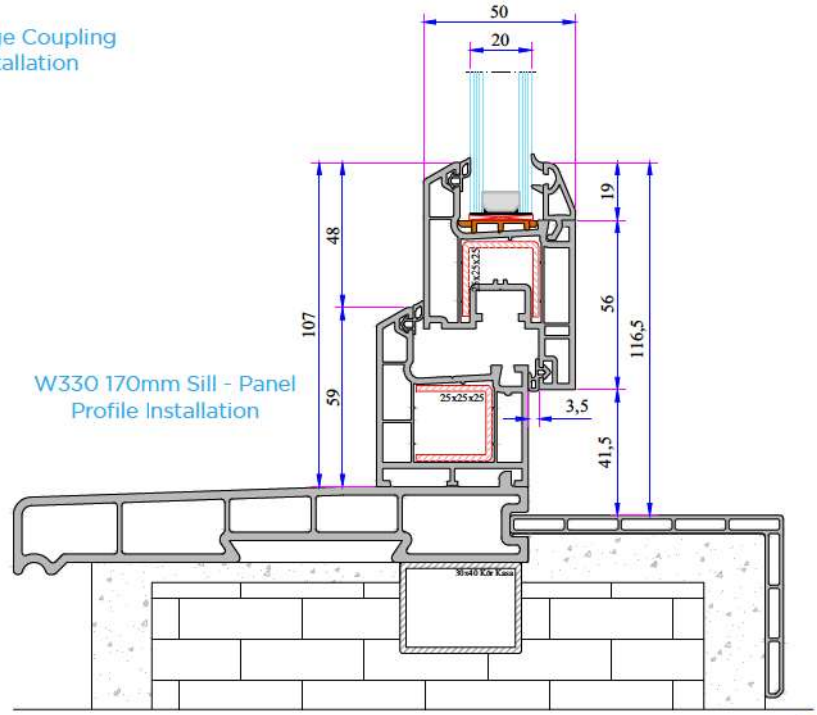

W330 170mm Sill - Panel
Profile Installation

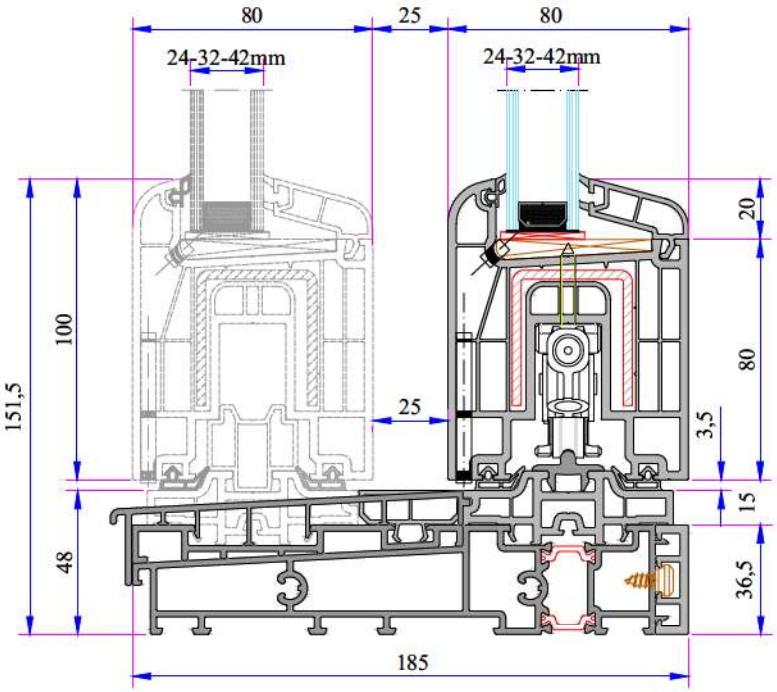

TECHNICAL

W 880 HEBESCHIEBE SERIES

Profile Width: 185 mm frame, 80mm sash.

Number of chambers: 5 chambers system

Profile Class: A Class (TS EN 12608-1) RAL 716-GZ

Seal Type: External / Internal double seal system

Seal Type and Color: TPE – Grey /Black

Glass Thickness (mm): 24, 32, 42 mm

The thermal insulation Uf: 1,5 W/m²K

INSTRUCTION

· 185 mm Frame, 80 mm sash profile combination.

· Because of the elastic grey and black seal which does not leave any stain on profiles will be provided maximum air, water, dust and sound isolation.

· Color range for laminated products.

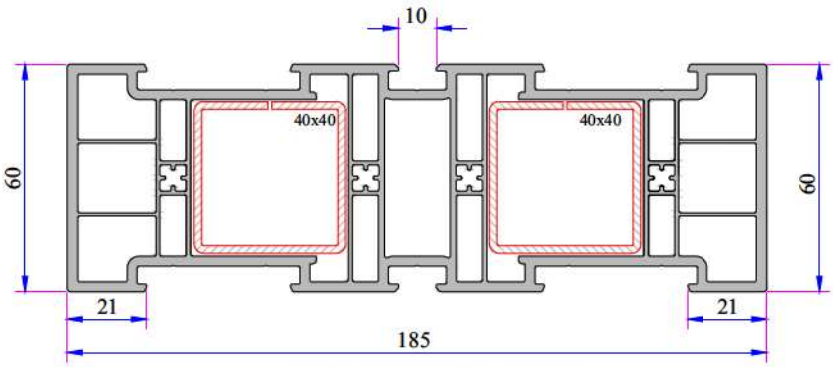

Hebeschiebe Frame Profile
930.1000

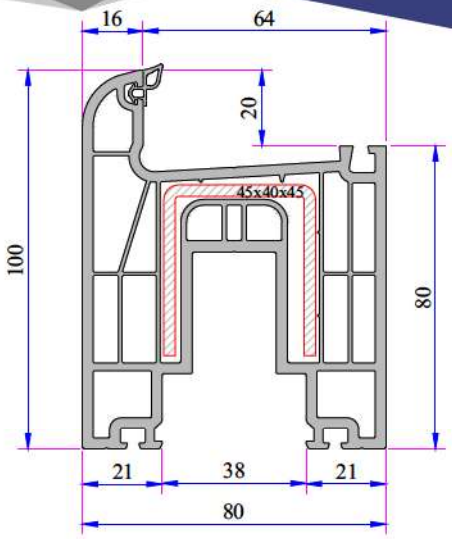

Hebeschiebe Sash Profile
930.2000

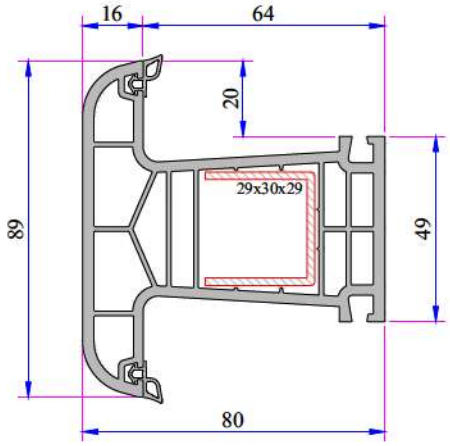

800 Series Mullion Profile
860.3000

Hebeschiebe Interior Part PVC Thermo Insulation Aluminium Threshold
AD16-026

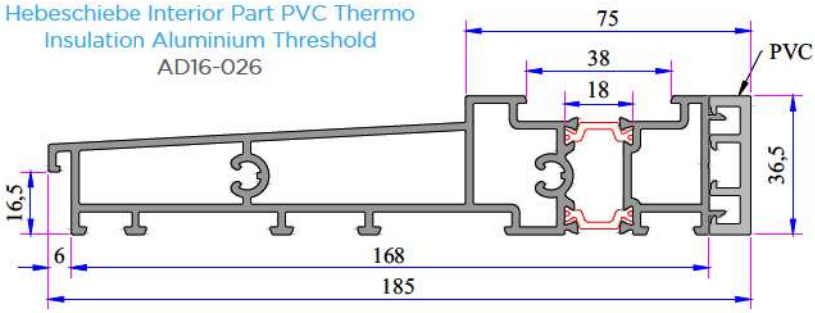

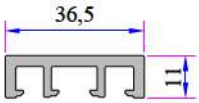

Aluminium Threshold Back Cover (PVC)
930.6502

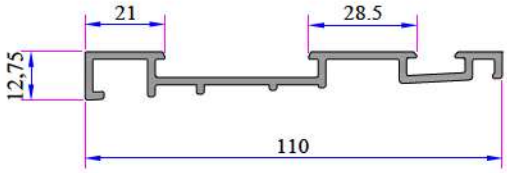

Aluminium Threshold Second Sash Rail
AD16-025

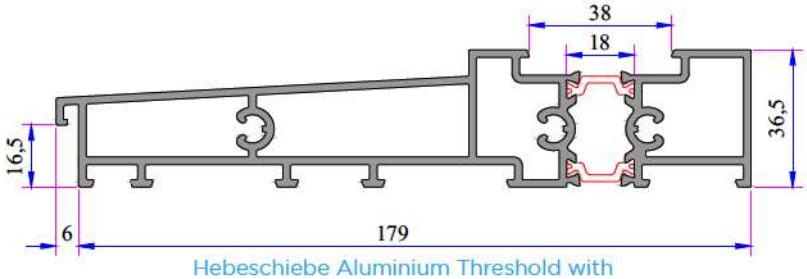

Hebeschiebe Aluminium Threshold with Thermo Insulation
AD16-027

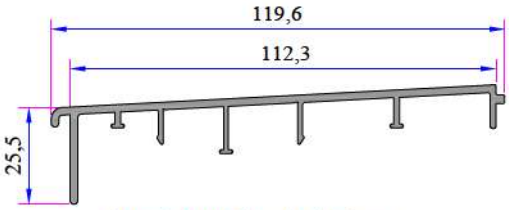

Aluminium Threshold Cover
AD16-024

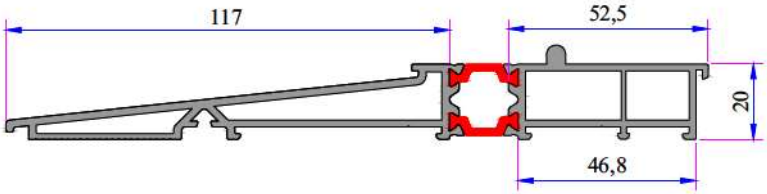

Hebeschiebe Aluminium Threshold with Thermo Insulation 20mm
(In Process)

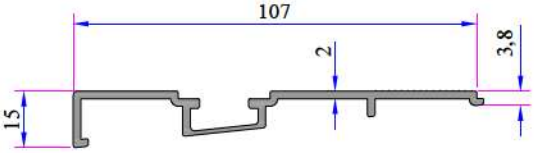

Aluminium Threshold Second Sash Rail
(In Process)

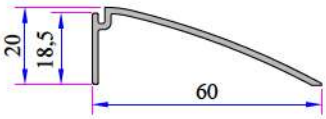

20mm Threshold Inner Profile
(In Process)

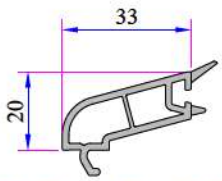

Double Glazing Bead (24mm)
800.4200

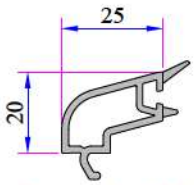

Triple Glazing Bead (32mm)
800.4500

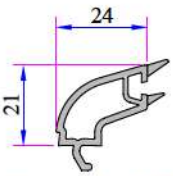

Triple Glazing Bead (32mm)
750.4204

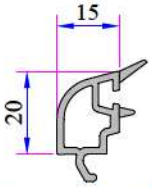

Triple Glazing Bead (42mm)
800.4600

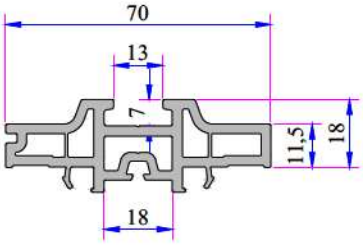

Hebeschiebe Sash and Rail Adaptor
930.6500

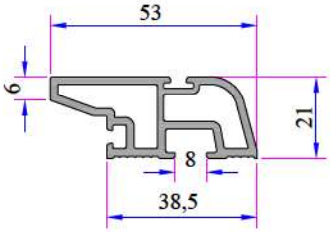

Hebeschiebe Sash Lap Strip Profile
930.6504

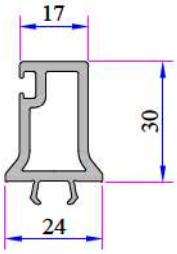

Hebeschiebe Frame Middle Adaptor
900.6503

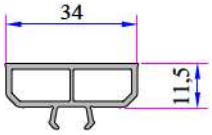

Hebeschiebe Sash Frame Middle Channel Cover
930.6505

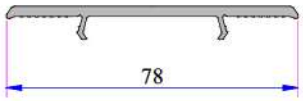

Hebeschiebe Sash Back & Frame Channel Cover
930.6506

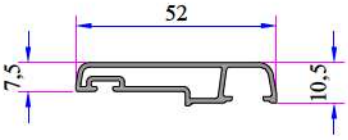

Frame Out Cornice Alm.
AD16-022

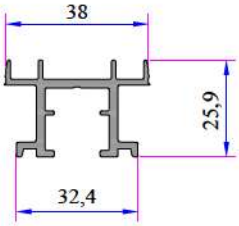

Frame Top Rail Aluminium
AD16-019

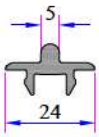

Sash Lower Rail Aluminium
AD16-020

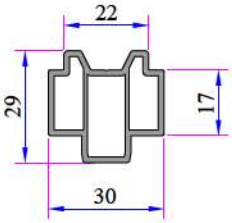

Stable Guide For Sash Aluminium
AD16-021

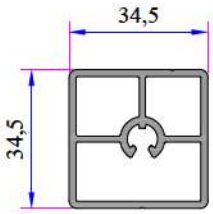

Frame Internal Puller Aluminium (8cm)
AD16-023

Hebeschiebe Set Accessories

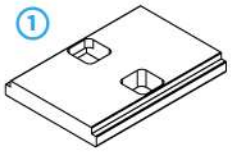

PVC Ve Alm. Lower Frame Corner Connection

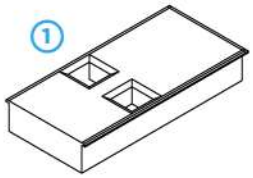

Multi Sash Below Part Impermeability

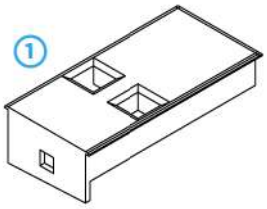

Double Sash Lower Middle Right Part Impermeability

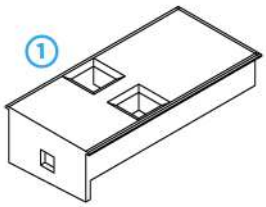

Double Sash Lower Middle Part Impermeability

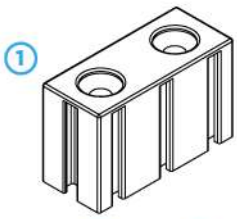

Frame - Sash Upper Middle Impermeability

(1) 34068-20110 ALUMINIUM FRAME SET RIGHT WHITE
(1) 34068-20111 ALUMINIUM FRAME SET RIGHT BLACK
(1) 34068-20120 ALUMINIUM FRAME SET LEFT WHITE
(1) 34068-20121 ALUMINIUM FRAME SET LEFT BLACK
(1) 34068-20130 PVC FRAME SET WHITE
(1) 34068-20131 PVC FRAME SET BLACK

PVC Frame Connection Impermeability Seal

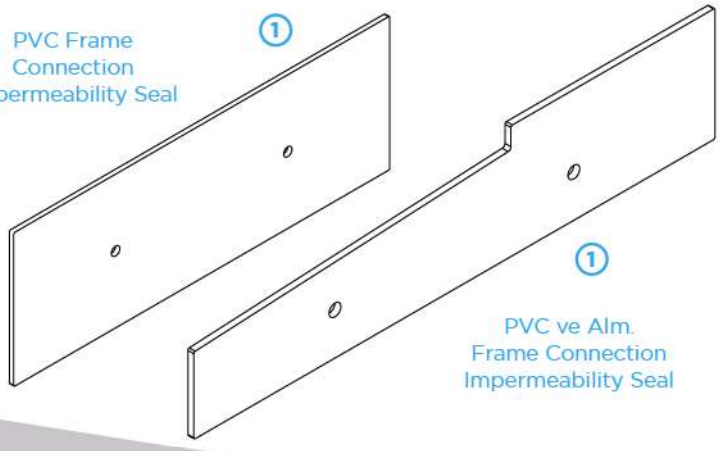

PVC ve Alm. Frame Connection Impermeability Seal

W 880 Hebeschiebe Re-Inforcement Profiles

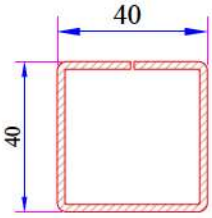

Hebeschiebe Frame Profile Reinforcement
34022-20110

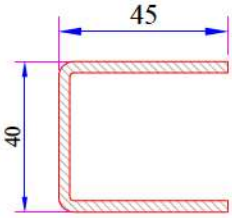

Hebeschiebe Sash Profile Reinforcement
34022-25001

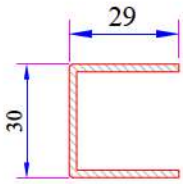

Mullion Profile Reinforcement
34022-15002

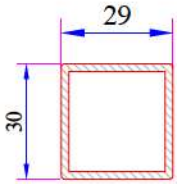

Mullion Profile Static Reinforcement
34022-15129

W 880 Hebeschiebe Installation

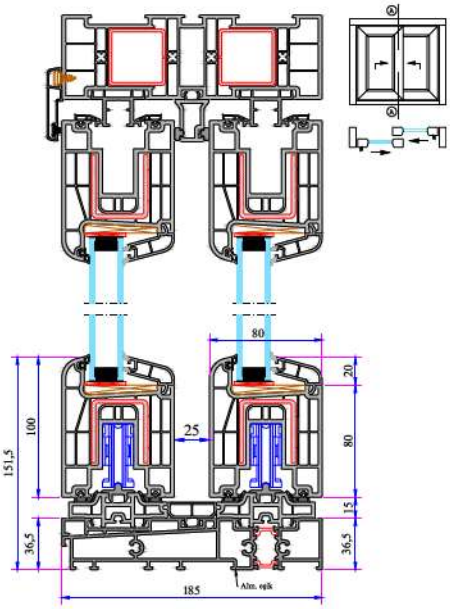

Sliding Double Sash – Aluminium Threshold Installation

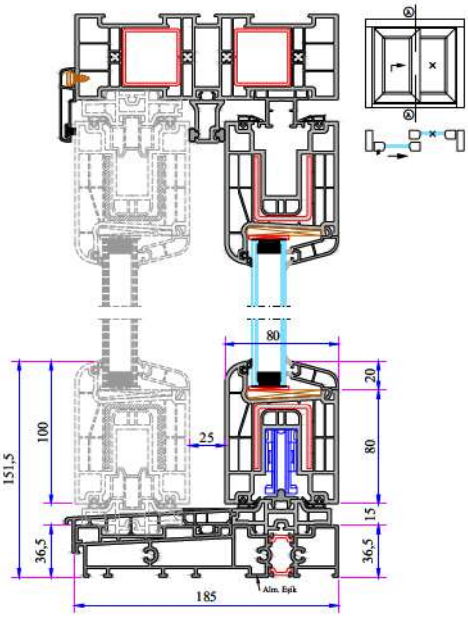

Single Sash Sliding – Lower Sill Aluminium Installation

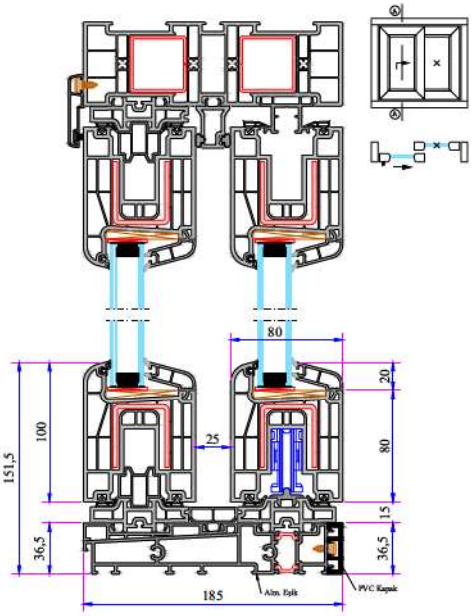

Single Sash Sliding- Lower Sill Aluminium - PVC Cover Installation

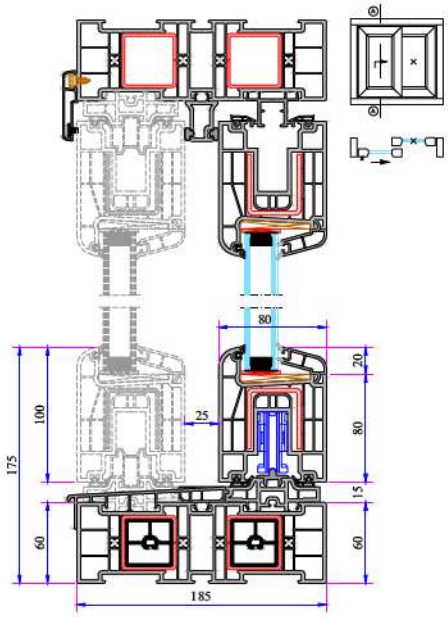

Single Sash Sliding Lower Sill PVC Installation

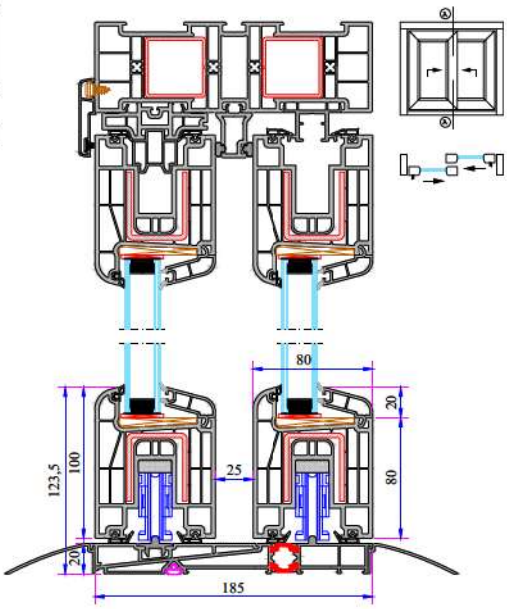

Double Sash Sliding - Lower Sill 20mm Aluminium Installation

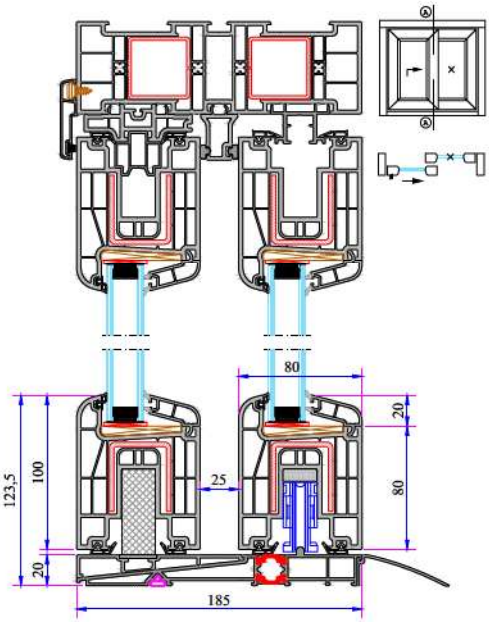

Single Sash Sliding – Lower Sill 20mm Aluminium Installation

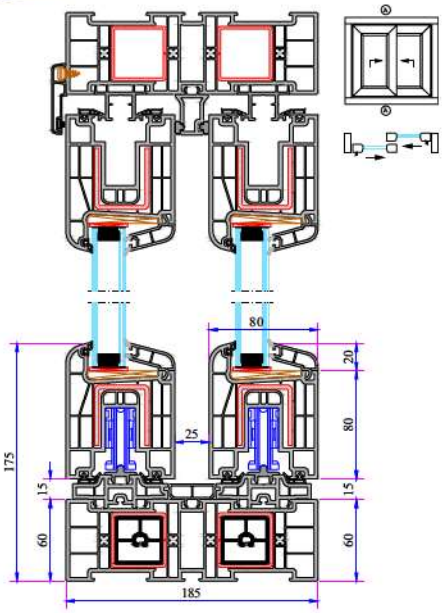

Double Sash Sliding - PVC Frame
İnstallation

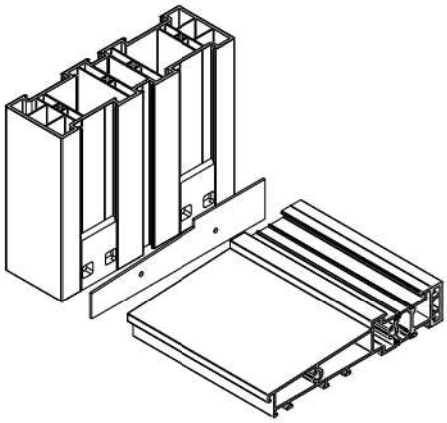

Frame - Alm. Threshold Connection
Installation

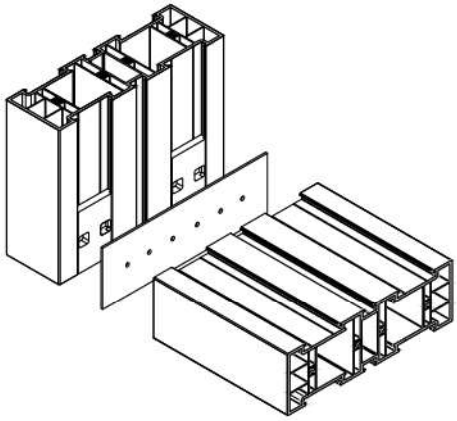

Frame Corner Connection
Installation

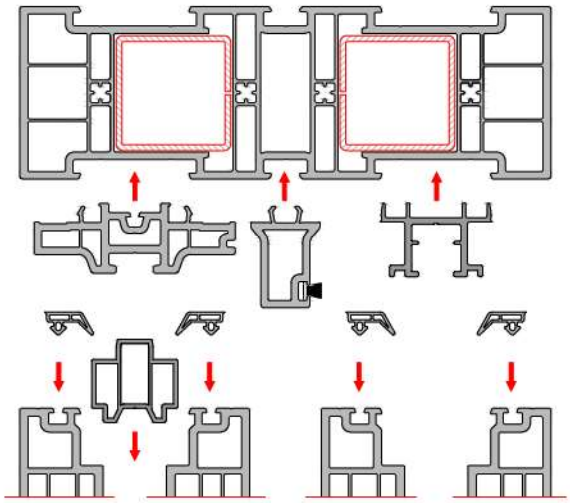

1 Sliding Sash System - Frame and Sash
Installation

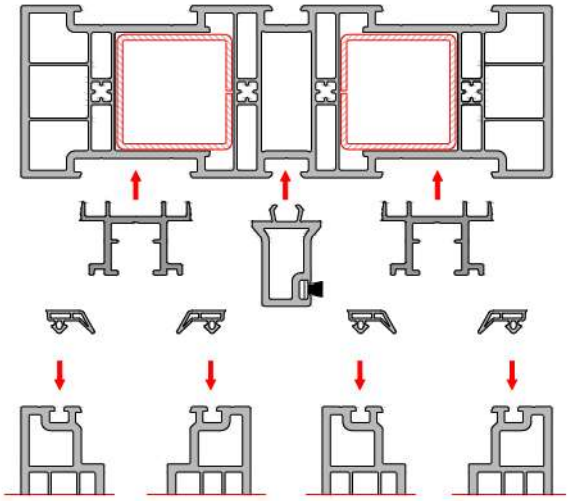

2 Sliding Sash System - Frame and Sash
Installation

Frame and Sash Vertical Side
Connection Pieces

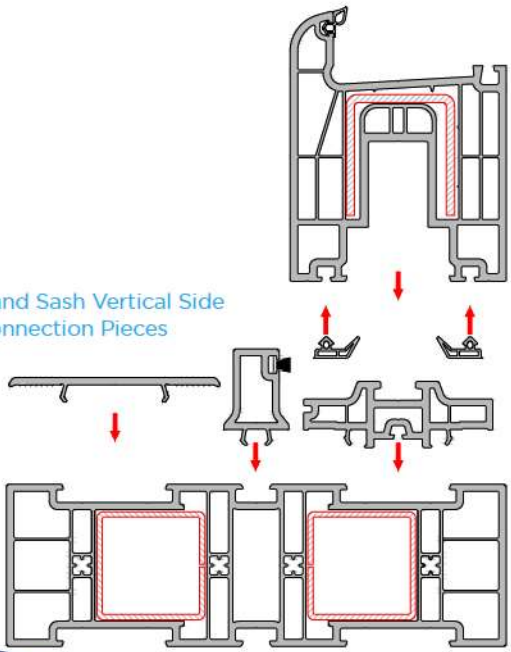

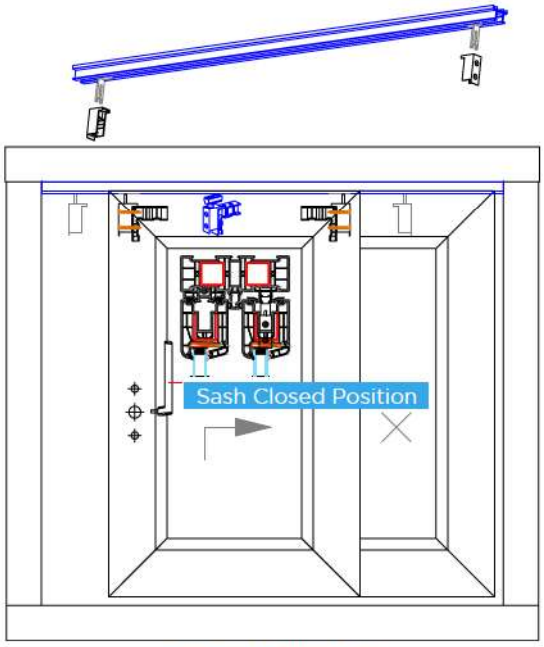

Top Rail Connection

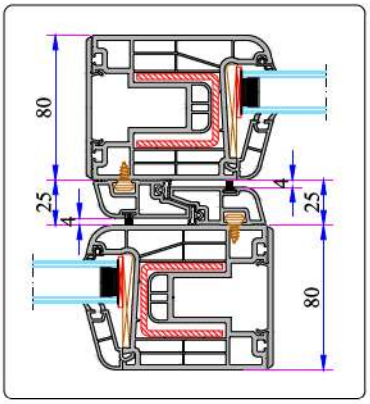

Sash Lap Strip
Profile Installation

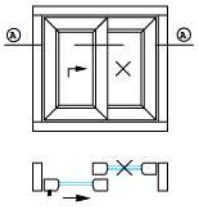

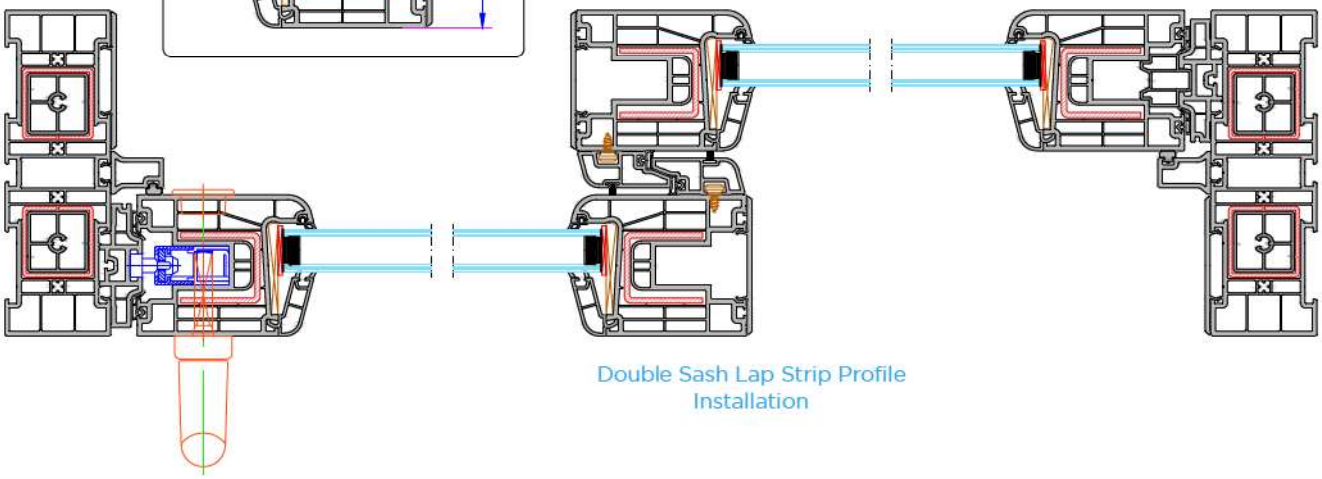

Double Sash Lap Strip Profile
Installation

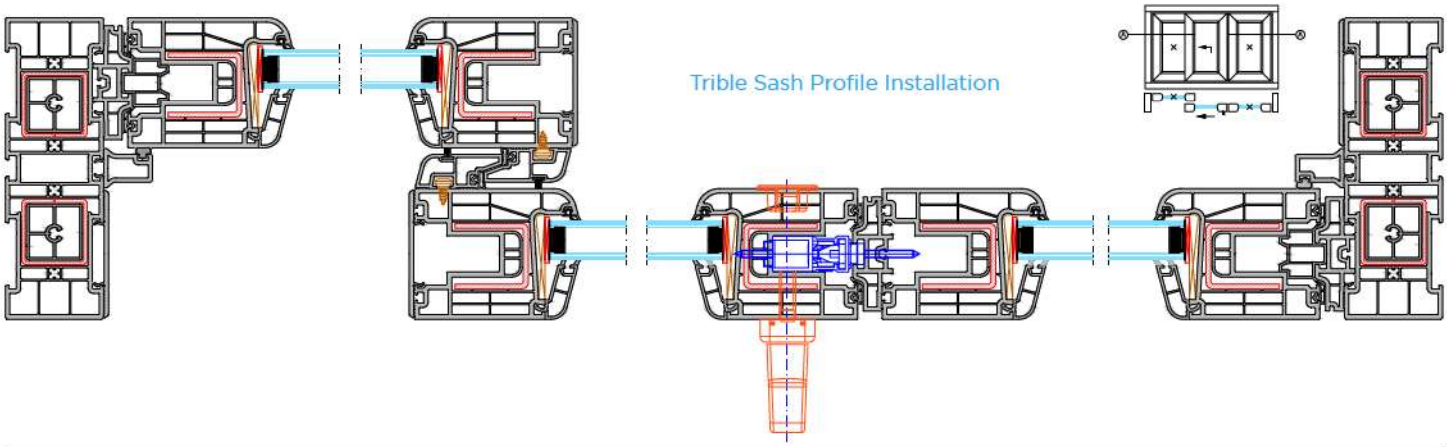

Trible Sash Profile Installation

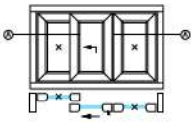

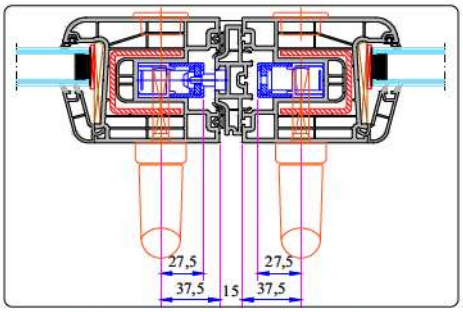

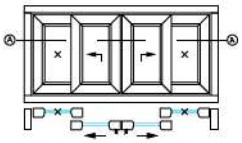

Sash and Rail Adaptor Installation

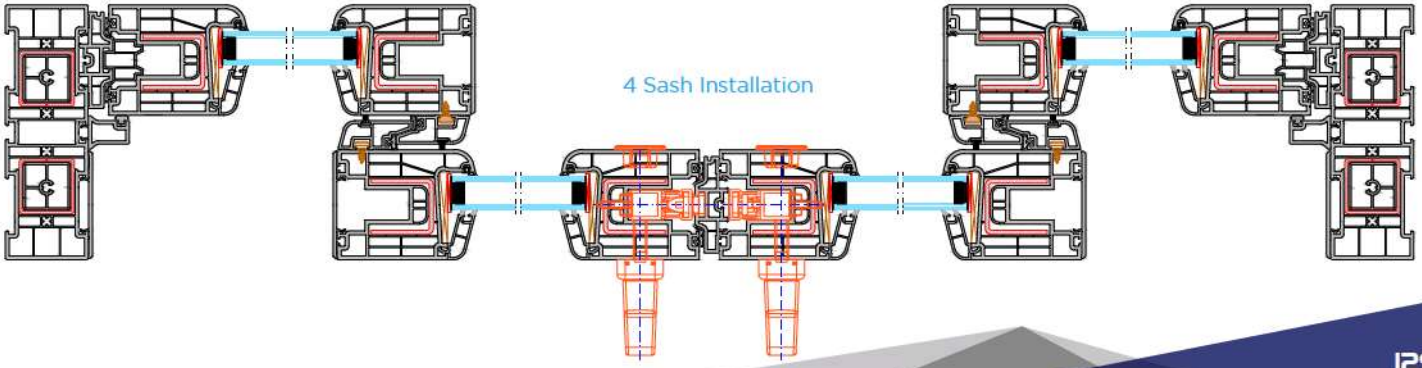

4 Sash Installation

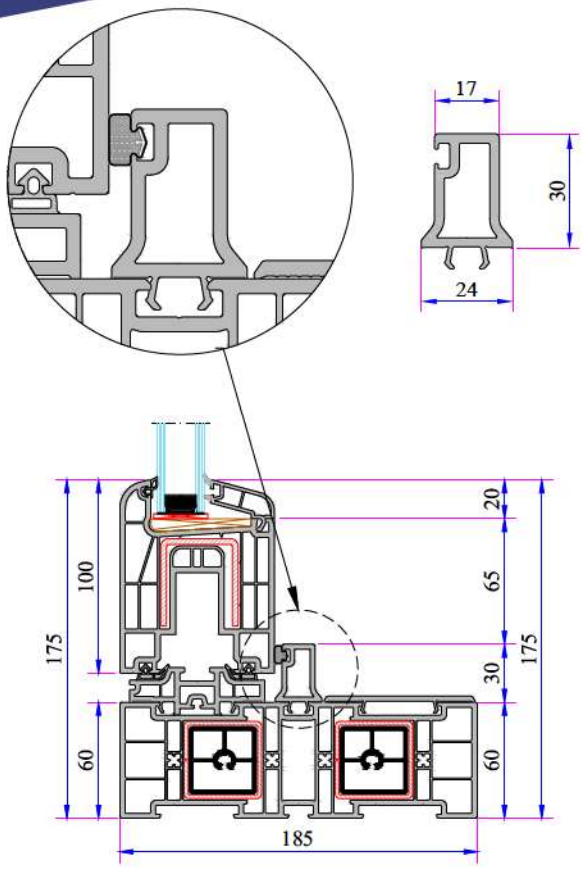

Hebeschiebe Frame Middle Adaptor Installation

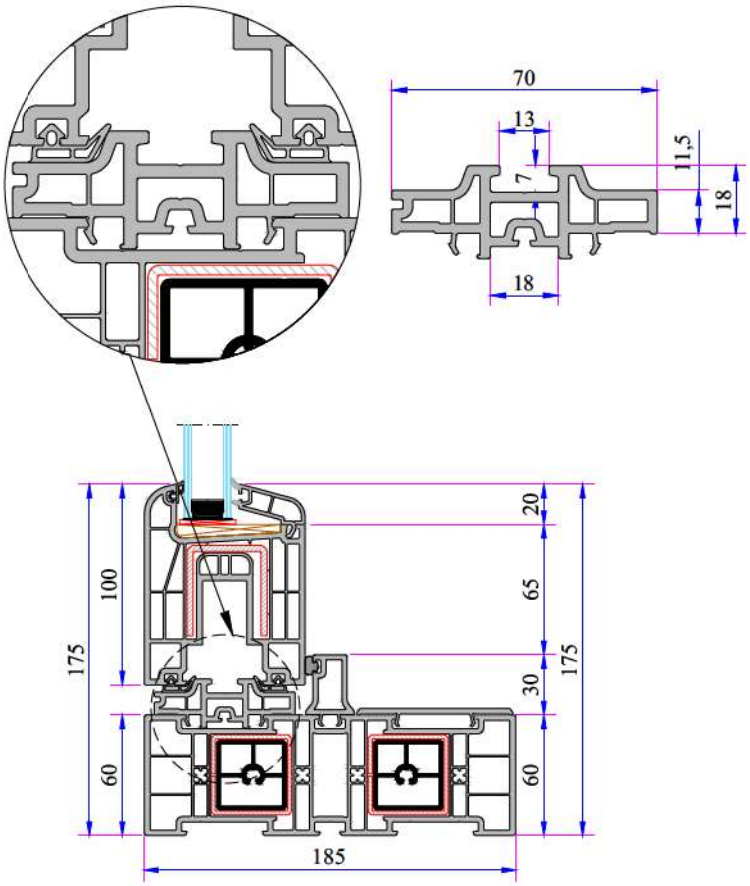

Hebeschiebe Sash and Rail Adaptor Installation

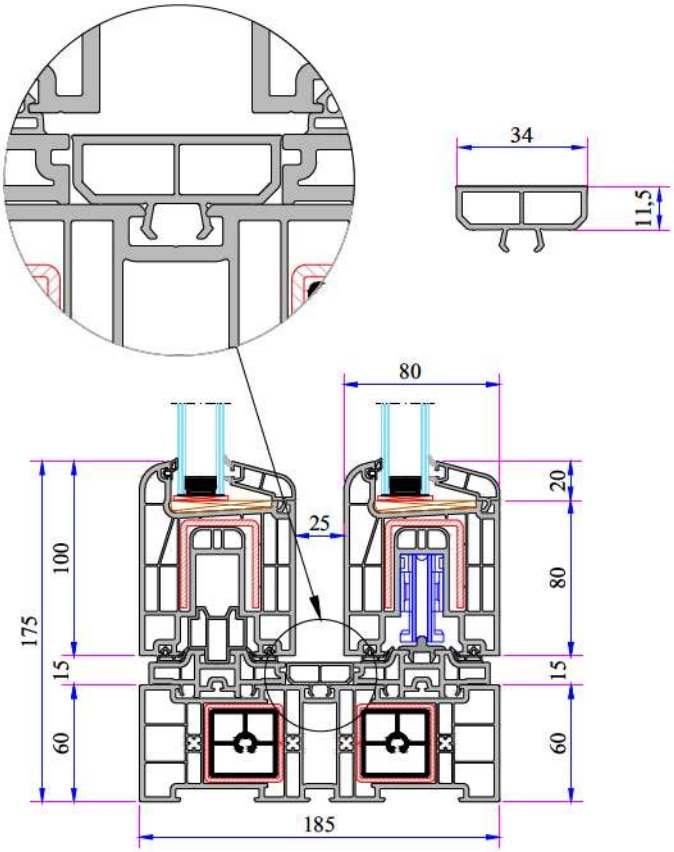

Hebeschiebe Sash Frame Middle Channel Cover Installation

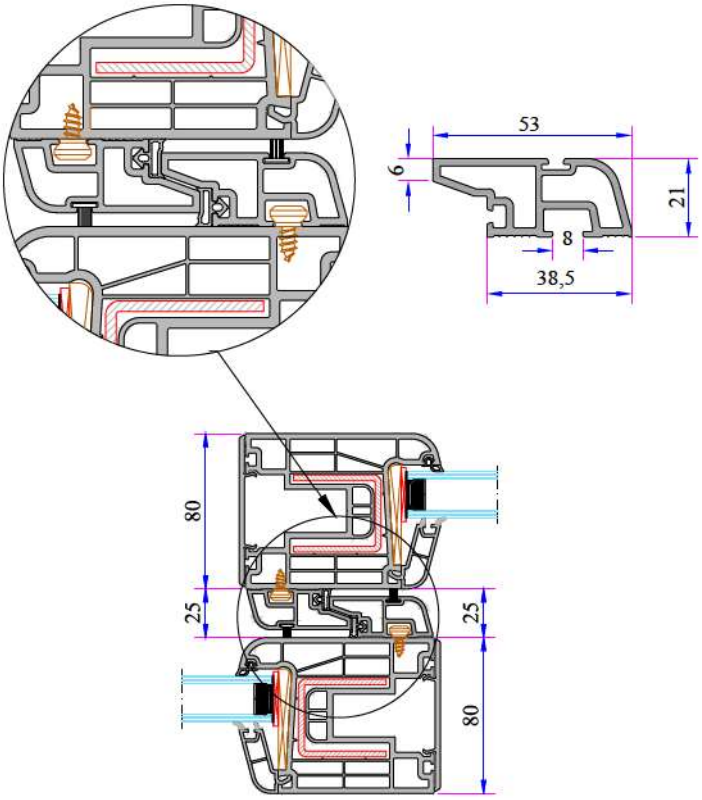

Hebeschiebe Sash Lap Strip Profile Installation

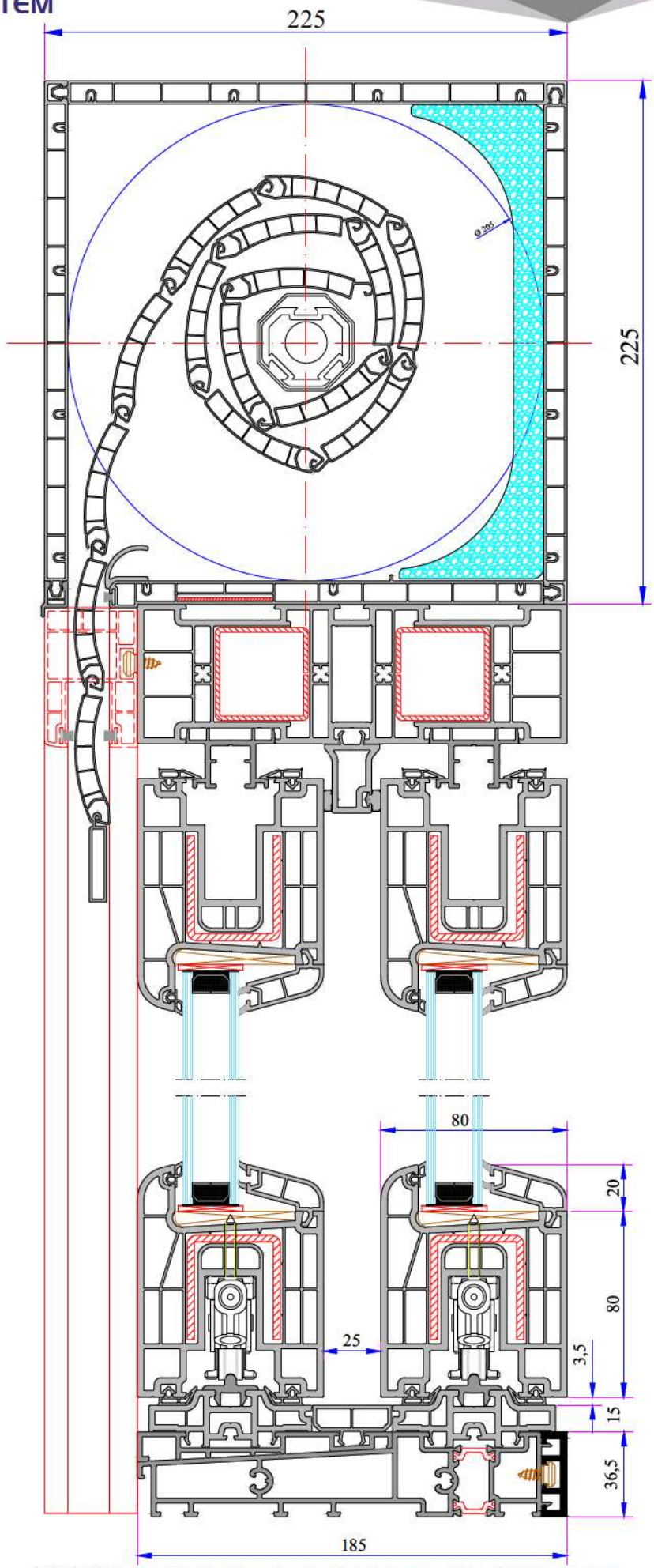

225x225 Roller Shutter Box Application In Hebeschiebe Sliding System
(55-37-39-40mm Slip Applicable)

THE APPLICATIONS OF HEBESCHIEBE SYSTEM

A SCHEMA

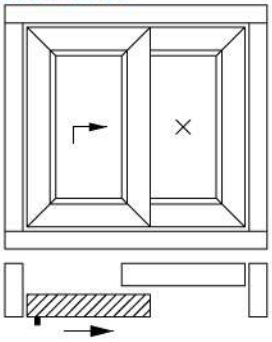

A SCHEMA

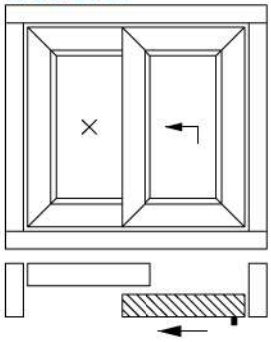

B SCHEMA

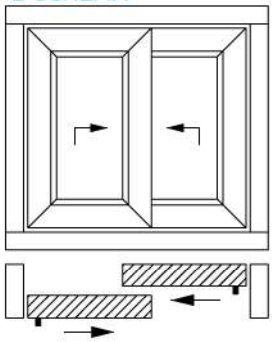

C SCHEMA

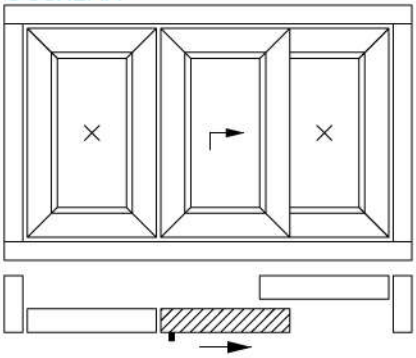

D SCHEMA

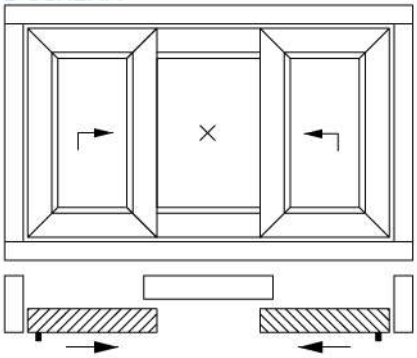

E SCHEMA

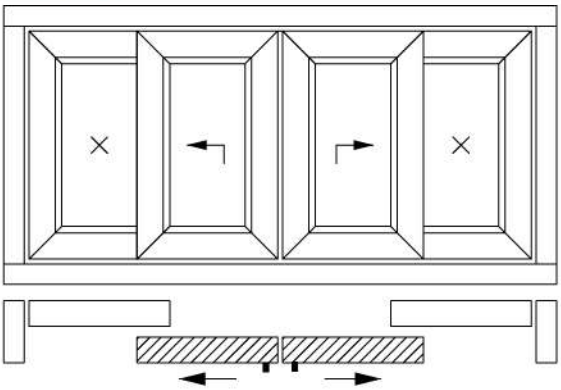

F SCHEMA

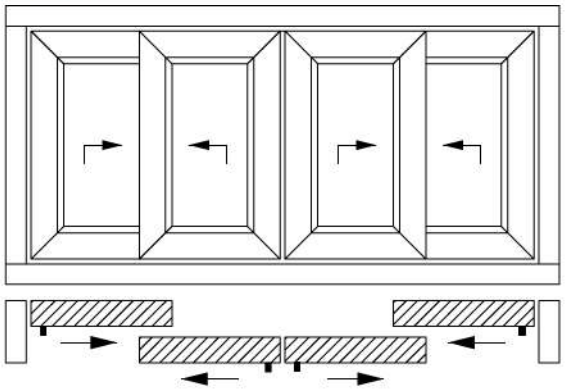

W 880 MAXIMUM MEASUREMENT

For W 880 series Windows, the maximum installation measurements (width/ height) are written on below chart.
The specified measurements can not be exceeded.

Description	White Profile		Colored Profile	
	(A - B) Double Sash	(C-D-E-F) Multi Sash	(A - B) Double Sash	(C-D-E-F) Multi Sash
Width (m)	6 m	6,5 m	5 m	6,5 m
Height (m)	2.7 m	2.7 m	2.4 m	2.4 m
Space of Glass (m^2)	6.5 m^2 x 2	-	5.5 m^2 x 2	-
Surface Area of Window (m)	16.2 m^2	17,5 m^2	12 m^2	15,6 m^2

The accessories of the system can handle (include also glass) maximum 300 kg. If the sash weight is more than 400 kg it, has to be used necessary accessories for this weight.

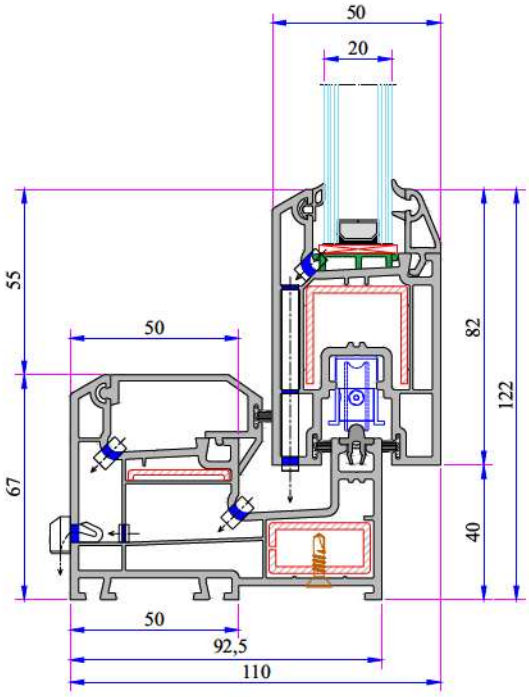

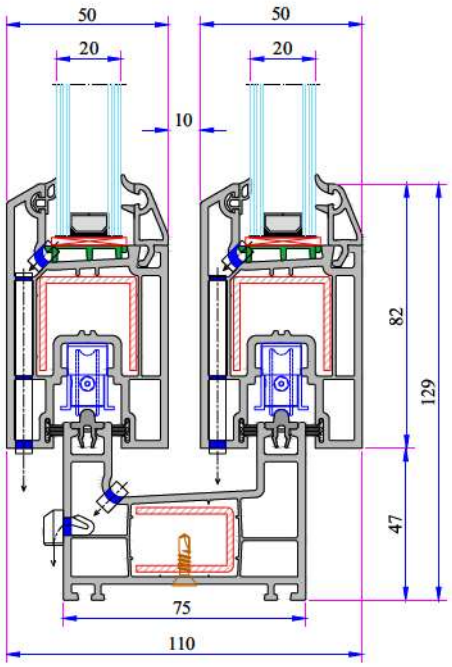

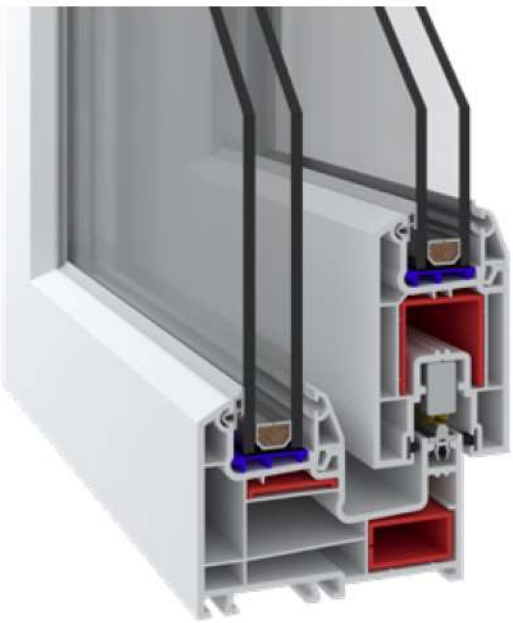

TECHNICAL

W 232 DOUBLE AND SINGLE RAIL SLIDING SERIES

Profile Width: 75 mm double rail frame, 92,5 mm single rail frame and 50 mm sliding system sash profile.
Number of chambers: 3 chambers system
Profile Class: B Class (TS EN 12608-1)
Seal Type: The insulated bristle wick system
Seal Type and Color: TPE – Grey /Black
Glass Thickness (mm): 4 - 6, 20, 24 mm

INSTRUCTION

· 75 mm profile width with double railed frame and 92,5 mm width single rail alternative frame and 50 mm width of sash profile.

· Perfect thermal, sound and water isolation because of the 3 chambers system.

· The medium locked sash with a seal system.

· Application of single glaze 4-6 mm and insulating glass 20, 24 mm by grey sealed glazing beads in different thickness.

· Application with roller shutter and without roller shutter choices.

· Wooden designed laminated applications.

W 232 RAIL SERIES
PVC PROFILE SYSTEM

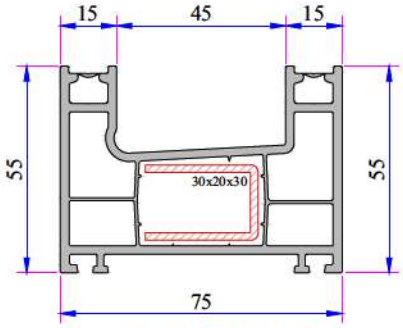

Frame Profile (Double Rail)
232.1106

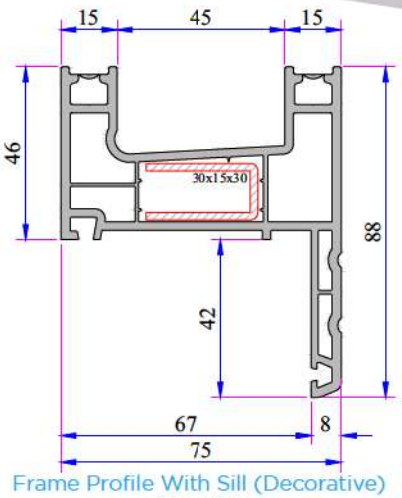

Frame Profile With Sill (Decorative)
232.1107

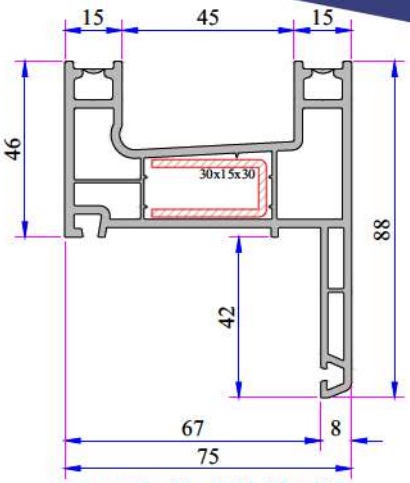

Frame Profile With Flat Sill
232.1110

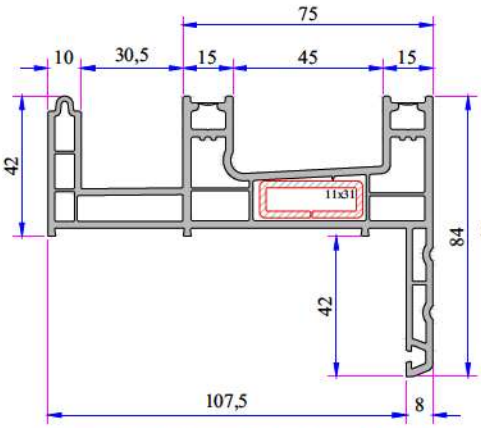

Frame Profile With Fly - Screen & Sill
232.1109

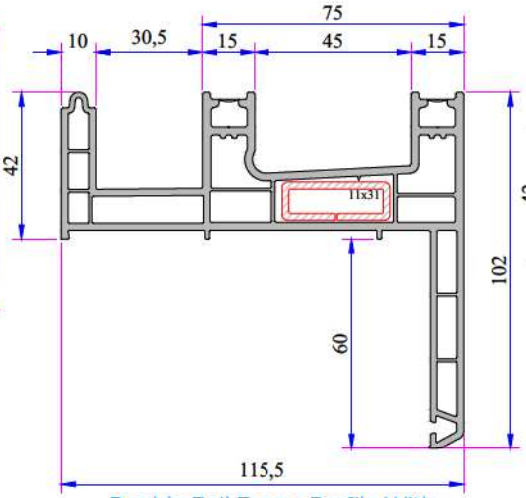

Double Rail Frame Profile With
Fly - Screen 60 mm Sill
232.1115

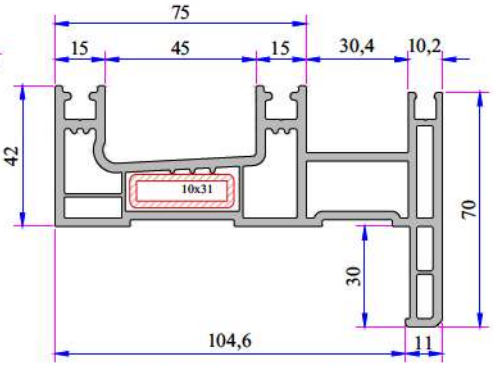

Frame Profile With Internal Fly-Screen
242.1104

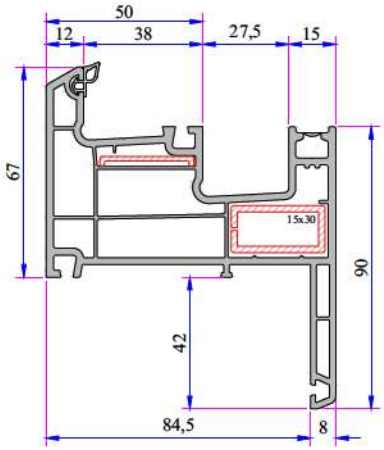

Frame Profile With Sill (Single Rail)
232.1114

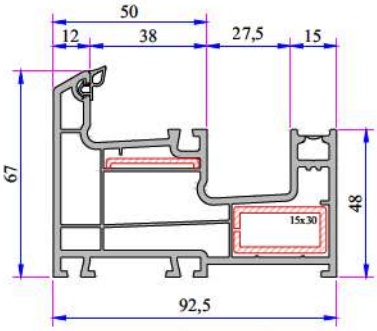

Frame Profile (Single Rail)
232.1105

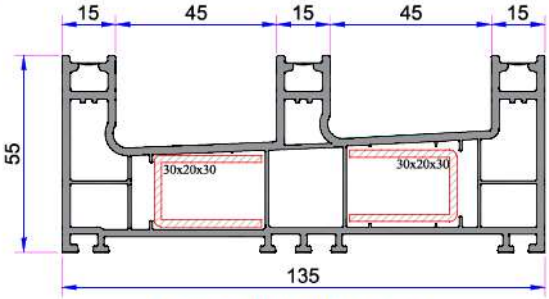

Frame Profile (Triple Rail)
232.1112

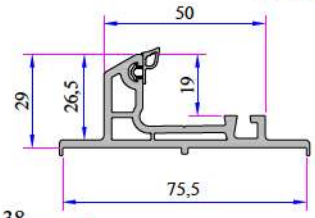

Double Rail
Adaptor Profile
232.5800

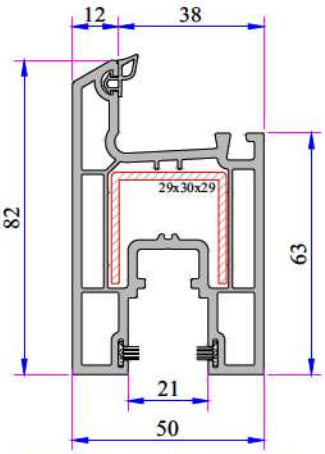

Sliding System Sash Profile
232.2300 (with Brush)
232.2301 (without Brush)

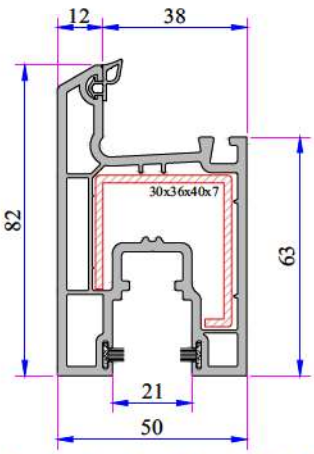

Sliding System Sash Profile (Static)
232.2308 (with Brush)
232.2309 (without Brush)

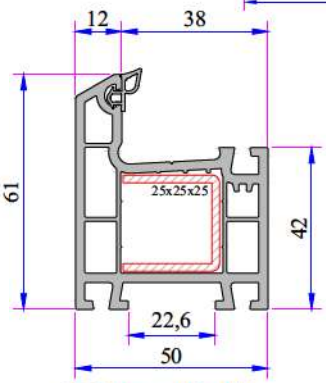

332 Frame Profile
332.1000

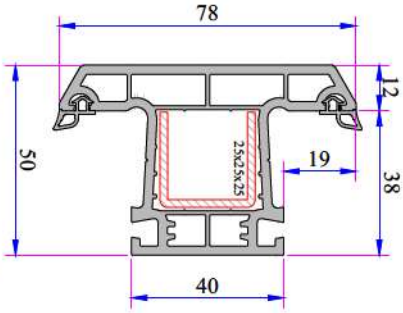

332 Mullion Profile
332.3000

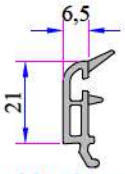

Double Glazing Bead
(24mm)
532.4500

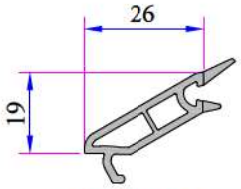

Single Glazing Bead
(4mm)
332.4000

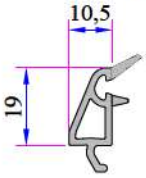

Double Glazing Bead
(20mm)
332.4100

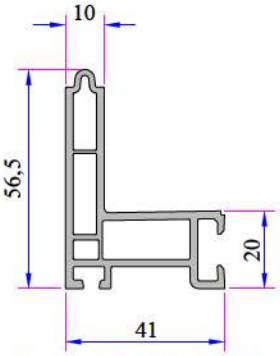

Screen Adaptör Profile
232.5802

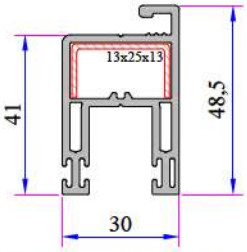

Fly-Screen Sash Profile
242.2305

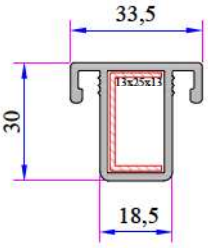

Fly-Screen Mullion Profile
242.3200

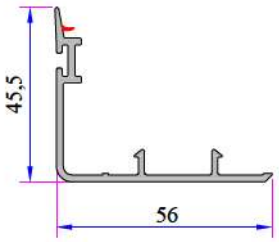

Sash Cover Profile
232.5709

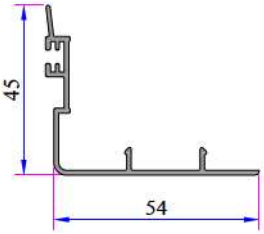

Alm. Sash Cover Profile
16051.601.5.1.1.9016

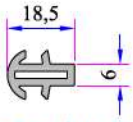

Short Coupling Profile
099.5003

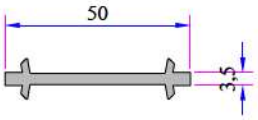

Narrow Coupling Profile
050.5001

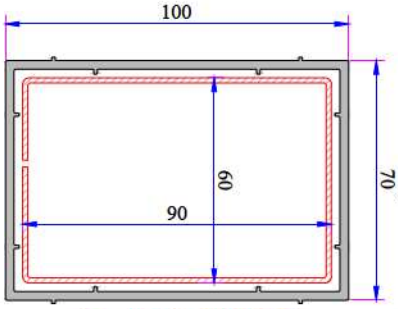

Box Profile (70x100)
070.5202

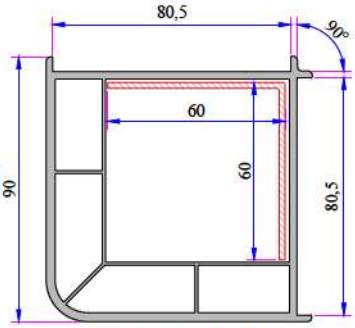

90° Corner Profile
080.5100

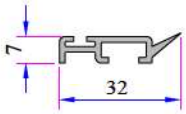

Lap Strip Profile
232.5801

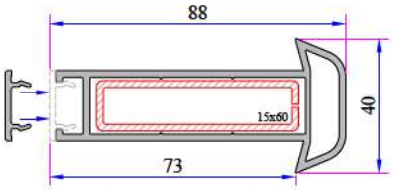

Universal Large Coupling Profile
058.5000

Universal Large Coupling
Cover Profile
058.5707

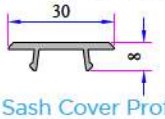

Screen Sash Cover Profile
242.5701

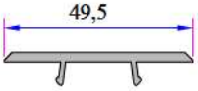

PVC Sash Cover Profile
232.5704

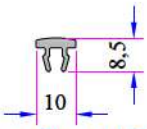

Frame Channel Cover
Profile
232.5703

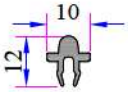

Alm. Sliding Rail Profile
16014.601.5 000

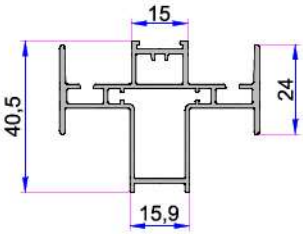

With Alum. Lug Double Sash
Middle Adaptor (In Process)

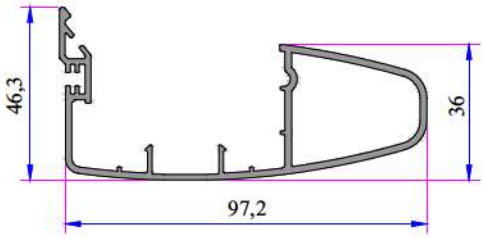

Sash Cover Grillage Profile
16028.601.5.2.000

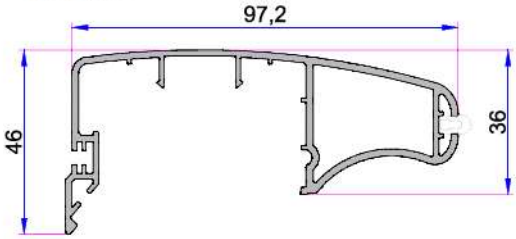

Sash Cover Grillage Profile
AD16061

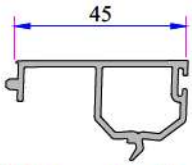

PVC Cover Profile
232.5710

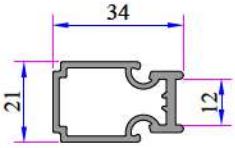

Alm. Double Rail
Adaptor Profile
AD16-011

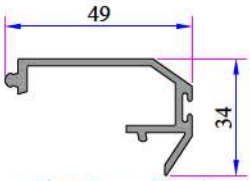

Alm. Cover Profile
16013.601.5.2 000

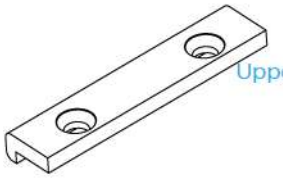

Upper bedding Piece for
Sliding Rail
34009-36010

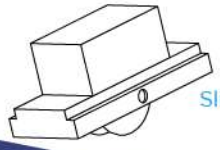

Sliding Roller Plastic
34009-17010

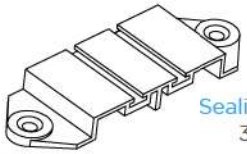

Sealing Bit Single Rail
34009-26020

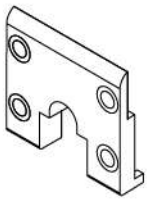

Sliding Sash End Bit
34009-46010

W 232 RAIL SERIES
PVC PROFILE SYSTEM

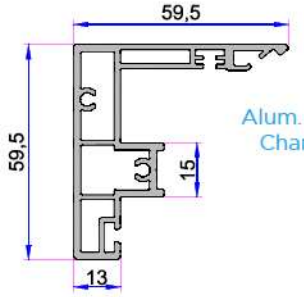

Alum. Sliding Mullion with 3 Chambered (In Process)

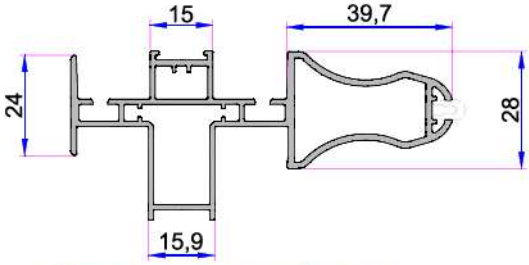

With Alum. Grillage Double Sash Middle Adaptor
AD16059

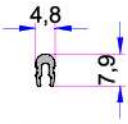

Decorative Pin
AD16062

W 232 Re-Inforcement Profiles

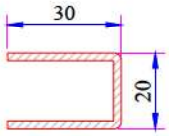

Double Rail Frame Profile Reinforcement
34022-12006

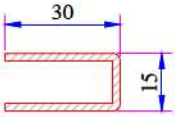

Frame Profile with Sill - Frame Profile with Flat Sill Reinforcement
34022-12034

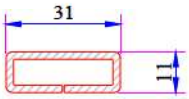

Frame With Fly-Screen & Sill Reinforcement
34022-12107

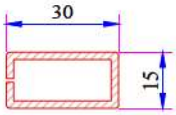

Frame Profile (Single Rail) - Frame Profile With Sill (Single Rail) Reinforcement
34022-12125

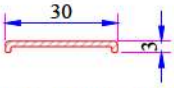

Frame Profile (Single Rail) - Frame Profile With Sill (Single Rail) Reinforcement
34022-12035

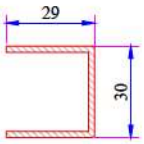

Sliding System Sash Profile Reinforcement
34022-12002

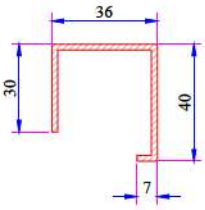

Sliding System Sash Profile (Static) Reinforcement
34022-12036

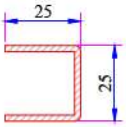

332 Frame - Mullion Profile Reinforcement
34022-12003

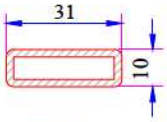

Frame With Internal Fly - Screen Reinforcement
34022-12107

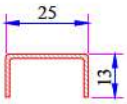

Fly-Screen Sash - Fly-Screen Mullion Profile Reinforcement
34022-12008

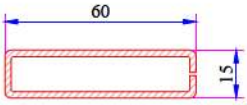

Universal Large Coupling Profile Reinforcement
34022-12123

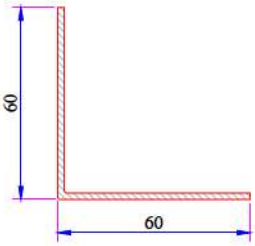

90° Corner Profile Reinforcement
34022-12306

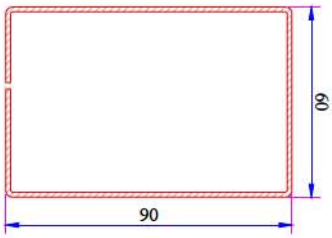

Box Profile Reinforcement
34022-12121

W 232 Installation

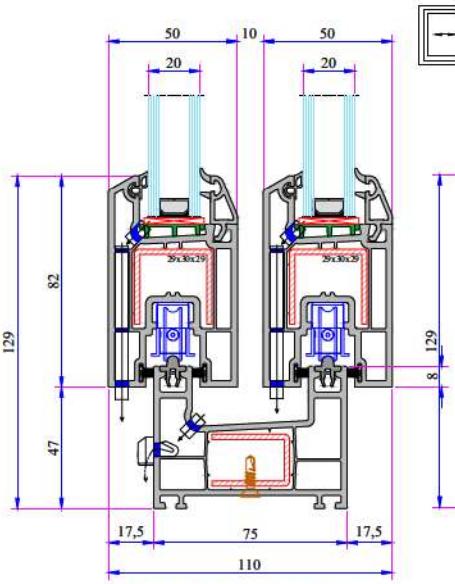

Sliding Frame Sash Double Rail Installation

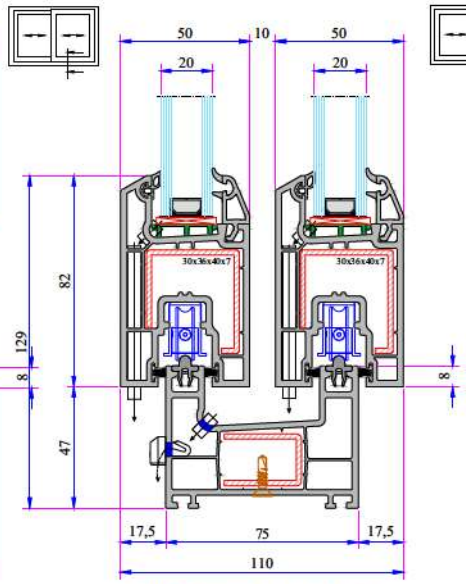

Sliding Frame Static Sash Double Rail Installation

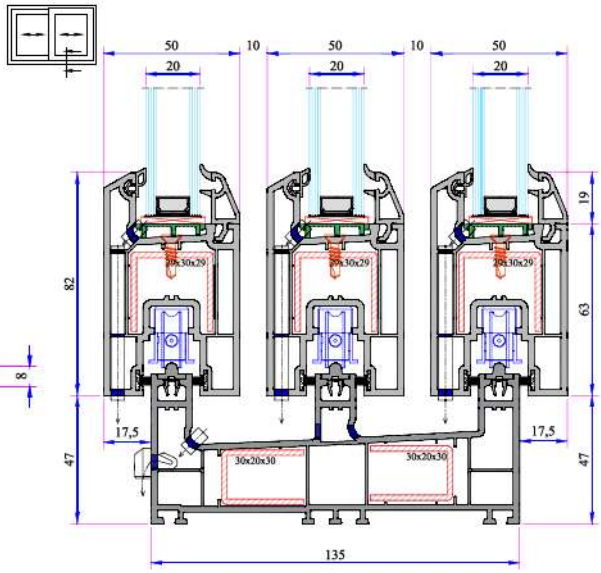

Frame Profile (Triple Rail) - Sliding System Sash Profile Installation

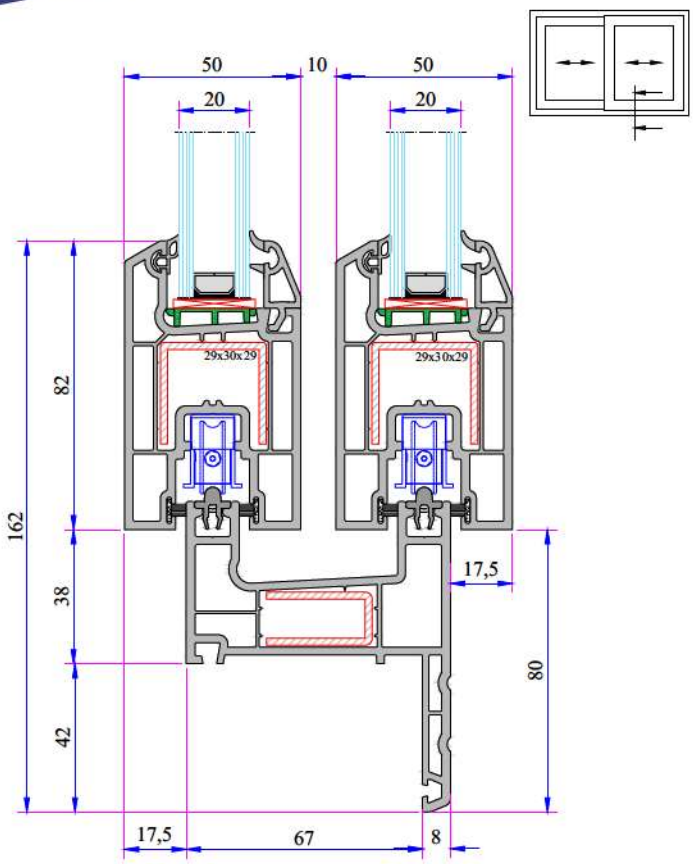

Double Sliding Frame with Sill - Sash Installation

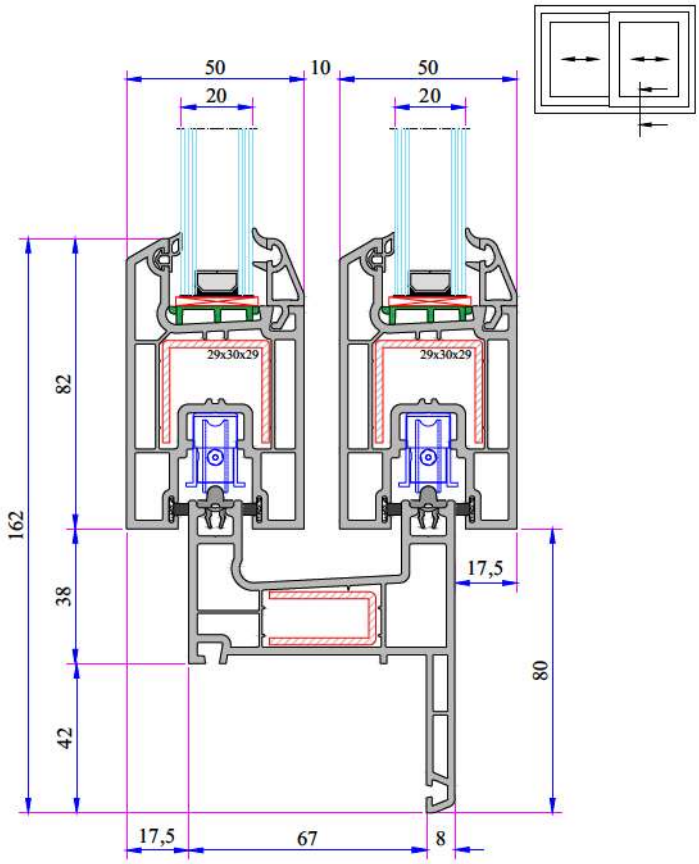

Double Sliding Frame with Flat Sill - Sash Installation

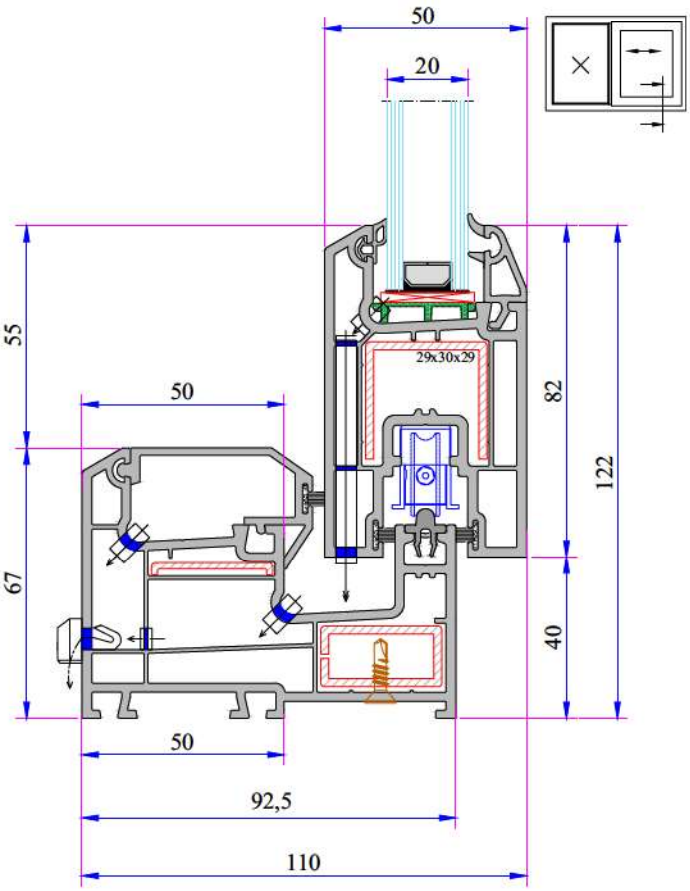

Sliding Frame Sash Single Rail Installation

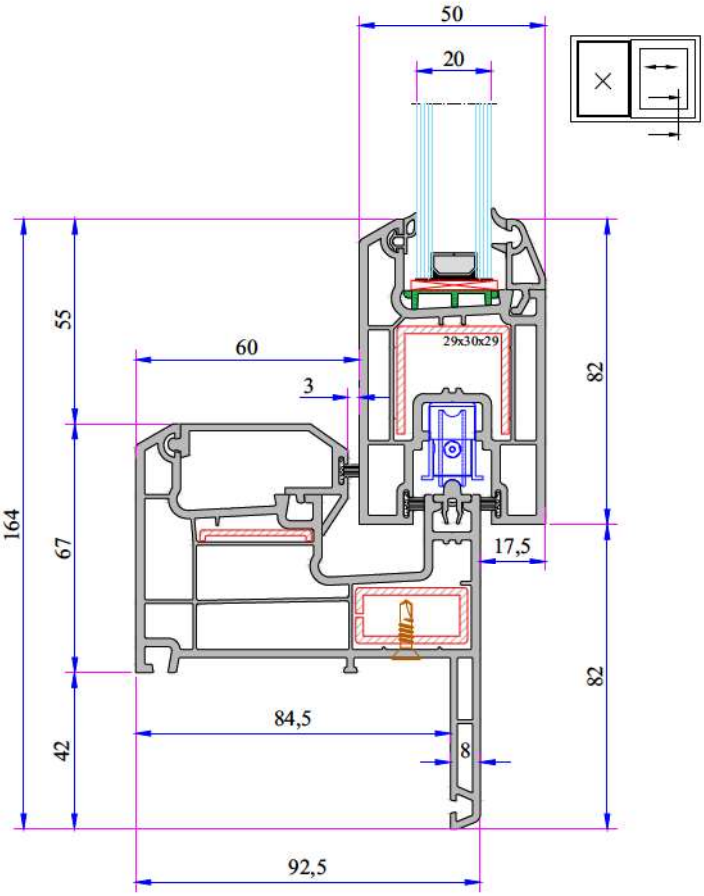

Frame Profile With Sill (Single Rail) Sash Installation

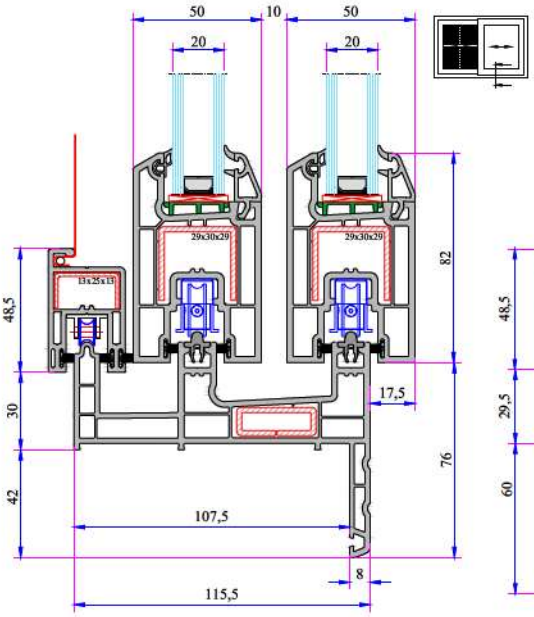

Sliding Frame - Sash - Screen - Sash Installation

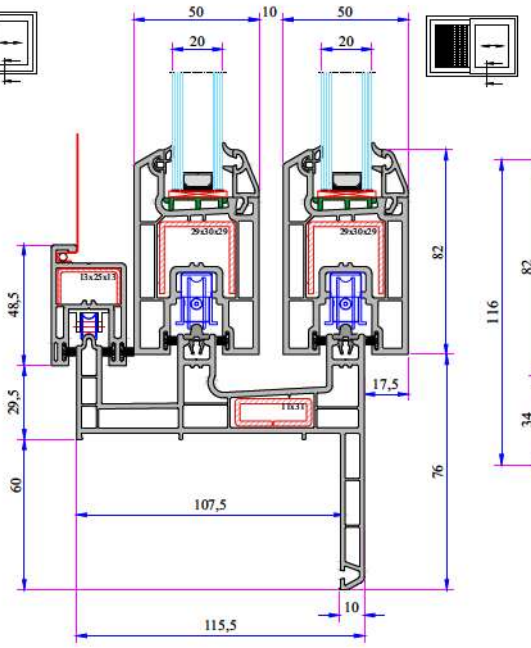

Sliding Frame - Sash - Screen - Sash Installation

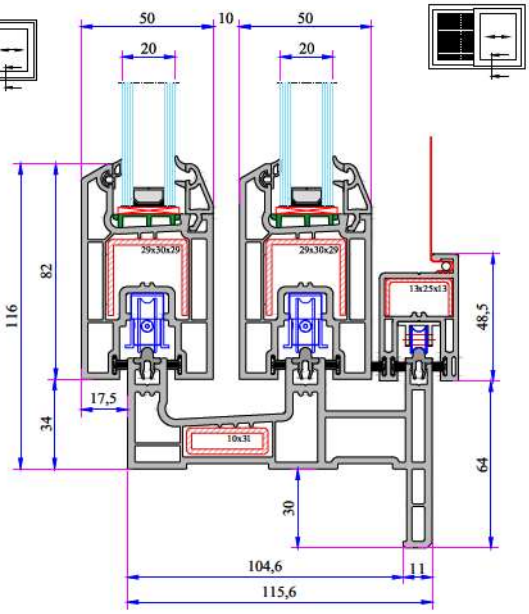

Sliding Frame - Sash - Screen - Sash Installation

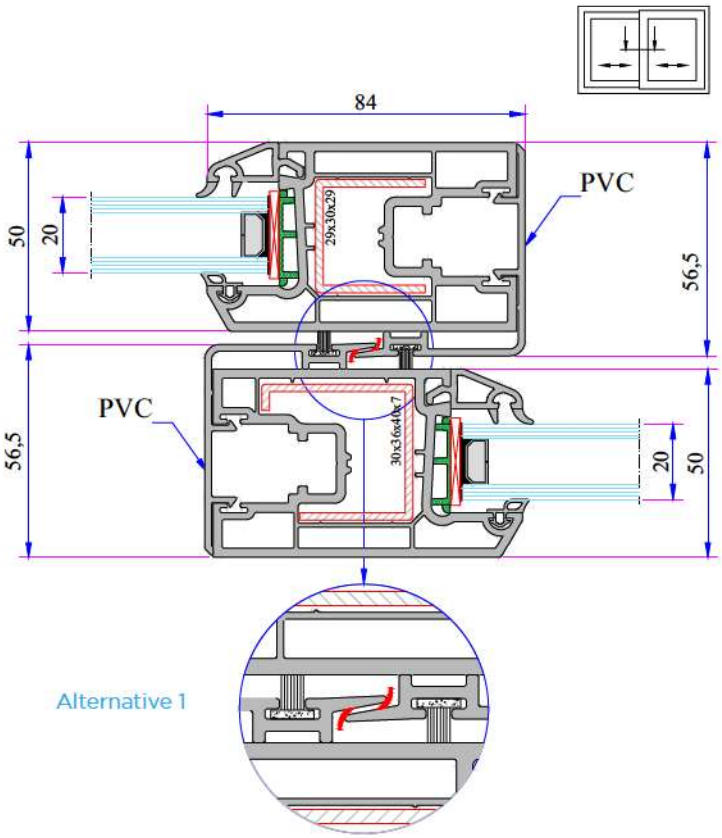

Alternative 1

PVC Sash Cover Profile Installation

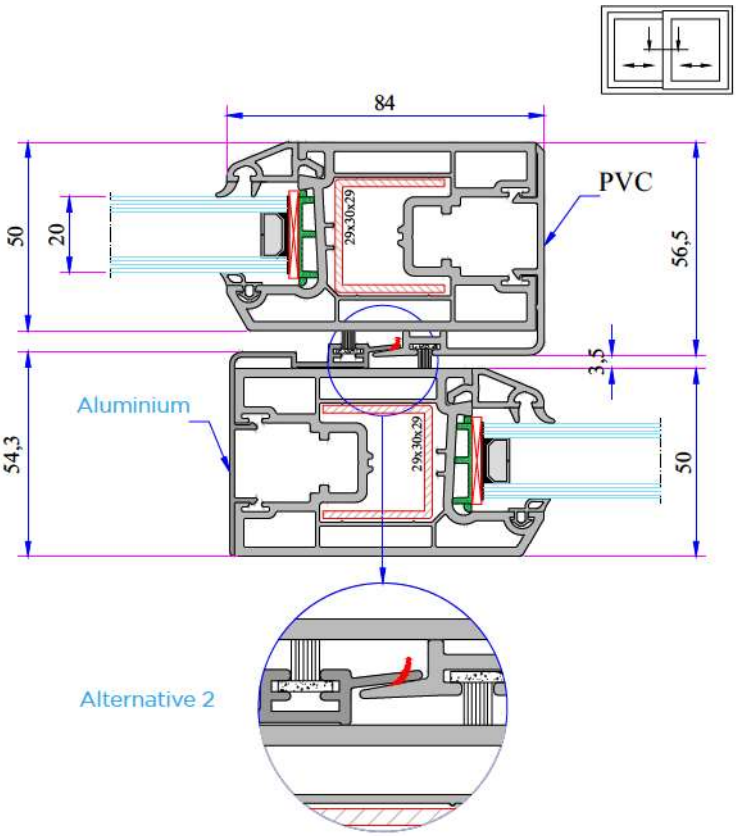

Alternative 2

PVC ve Aluminium Sash Installation Detail

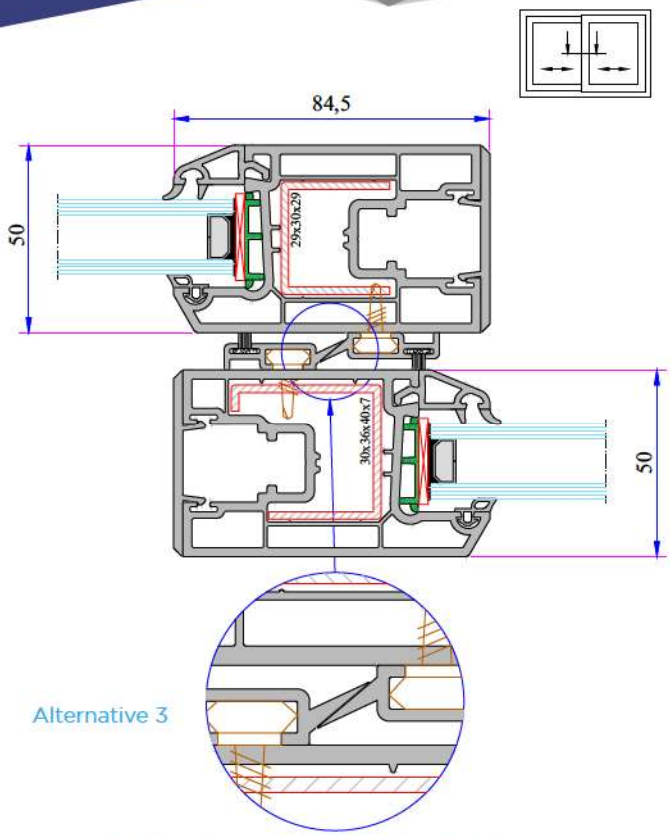

PVC Sash Cover and Lap Strip Profile Installation

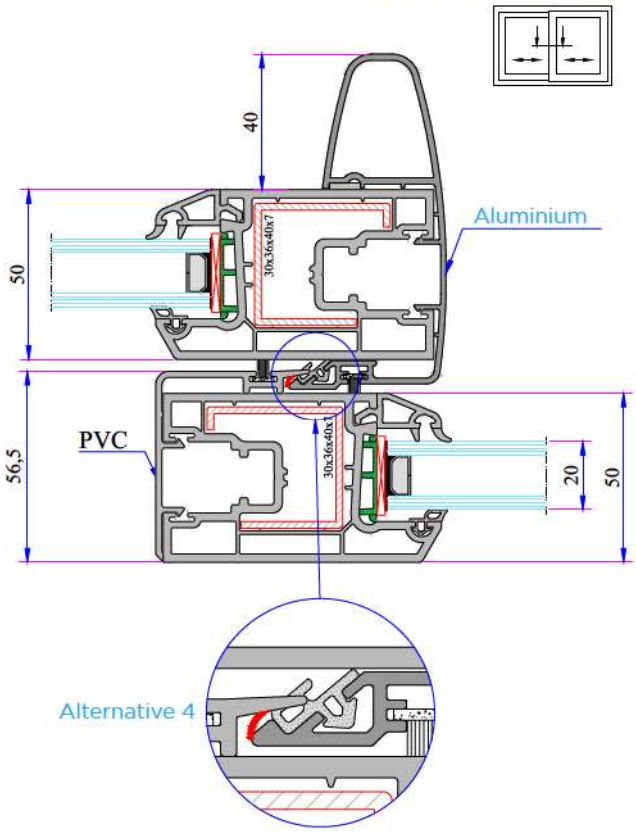

Alm. Sash Cover Grillage Profile Installation

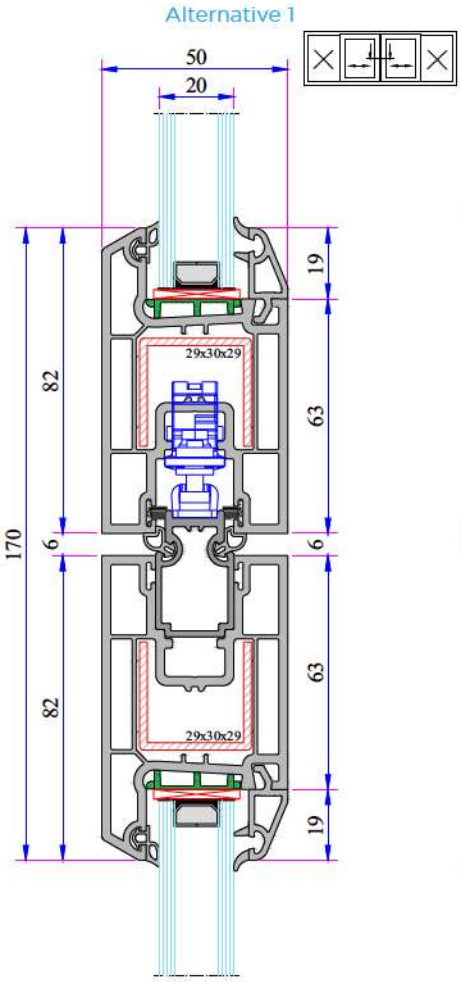

Alum. Double Rail Adaptor Installation Four Sash Middle Profile)

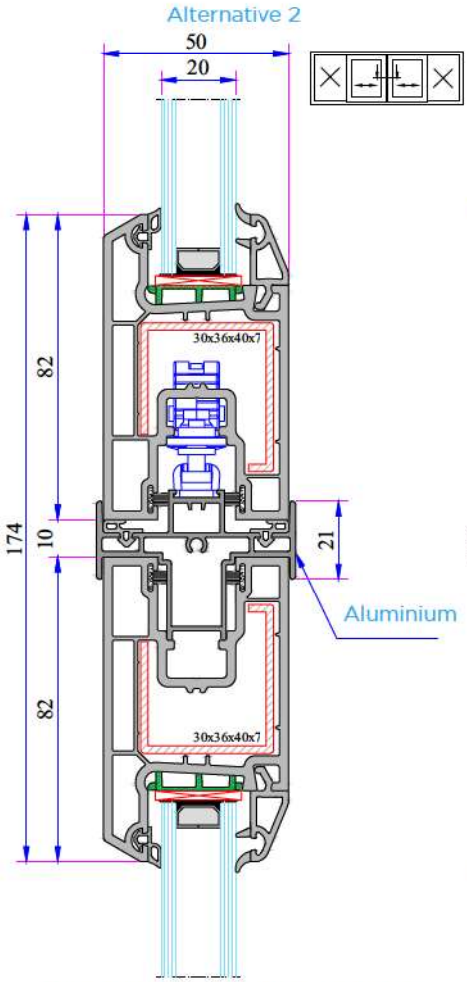

With Alum. Lug Double Sash Middle Adaptor Installation (Four Sash Middle Profile)

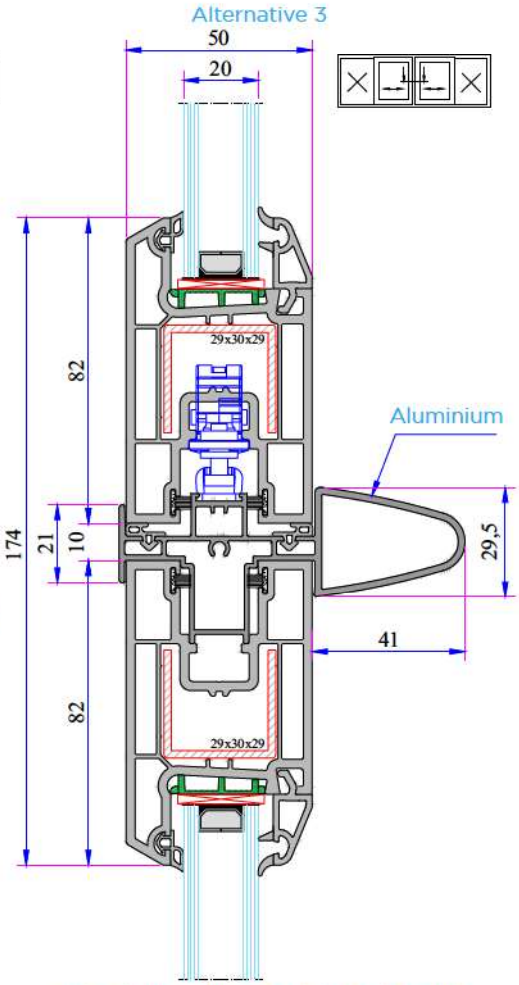

With Alum. Grillage Double Sash Middle Adaptor Installation (Four Sash Middle Profile))

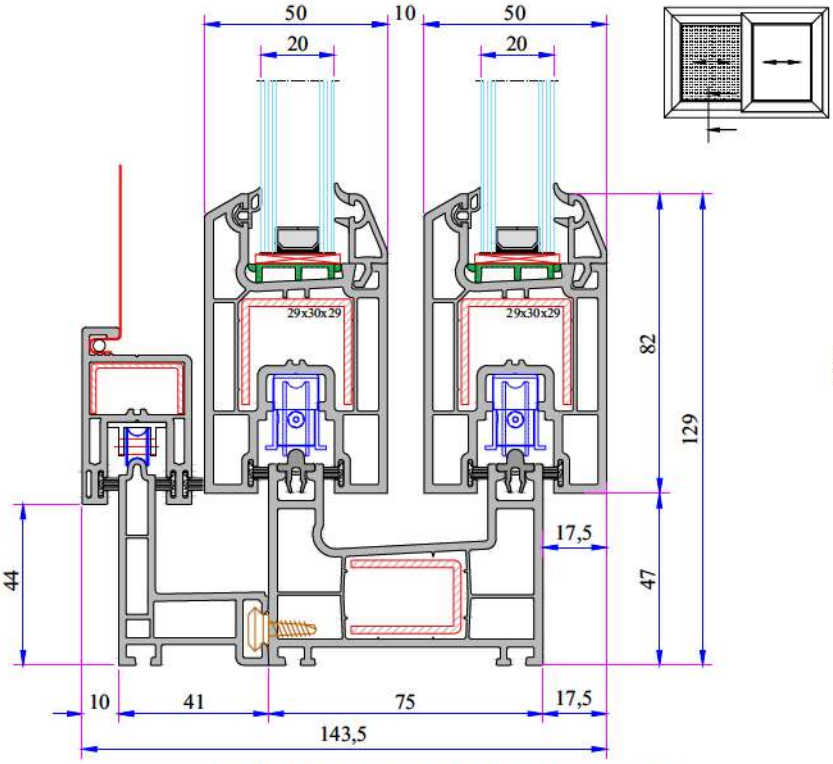

Double Railed Slyding Sash - Slyding Sash - Screen Profile Installation

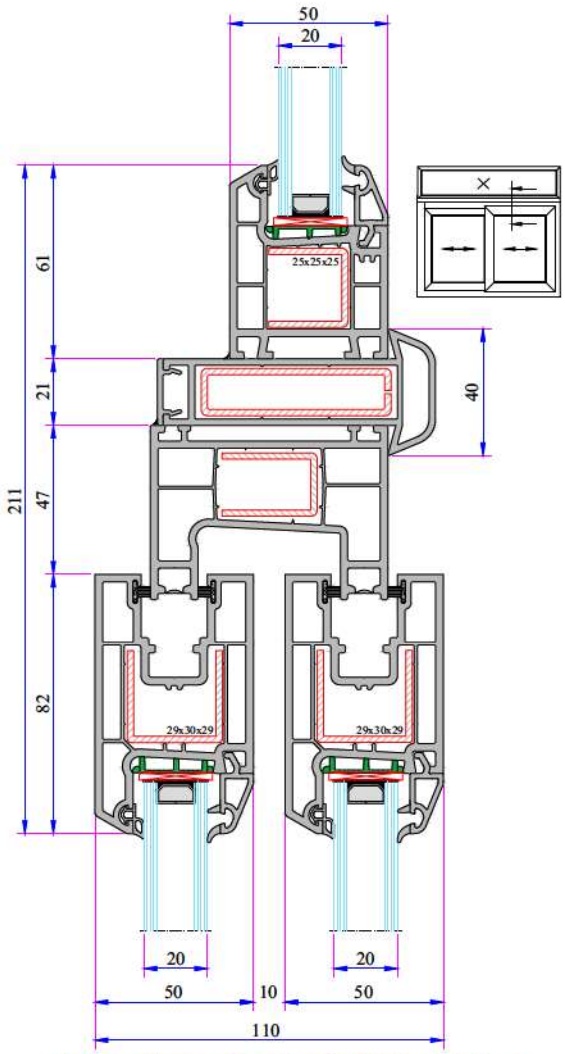

Universal Large Coupling Profile Installation

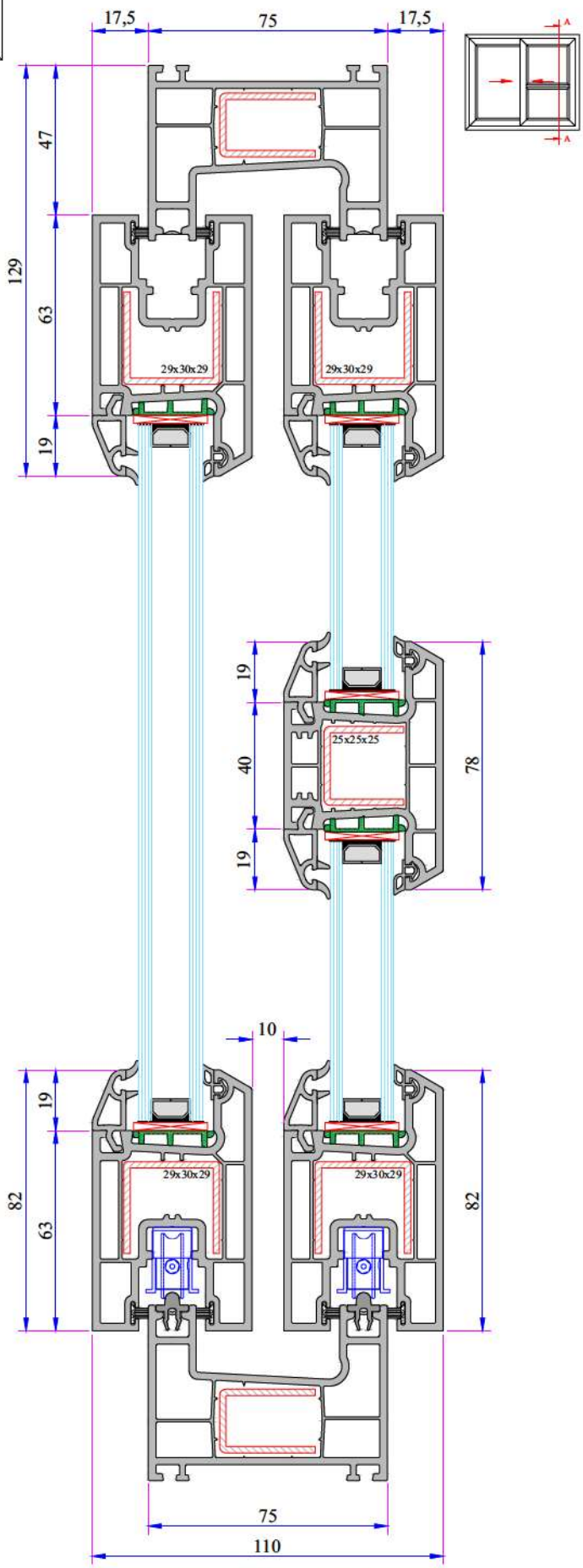

Mullion Profile Installation

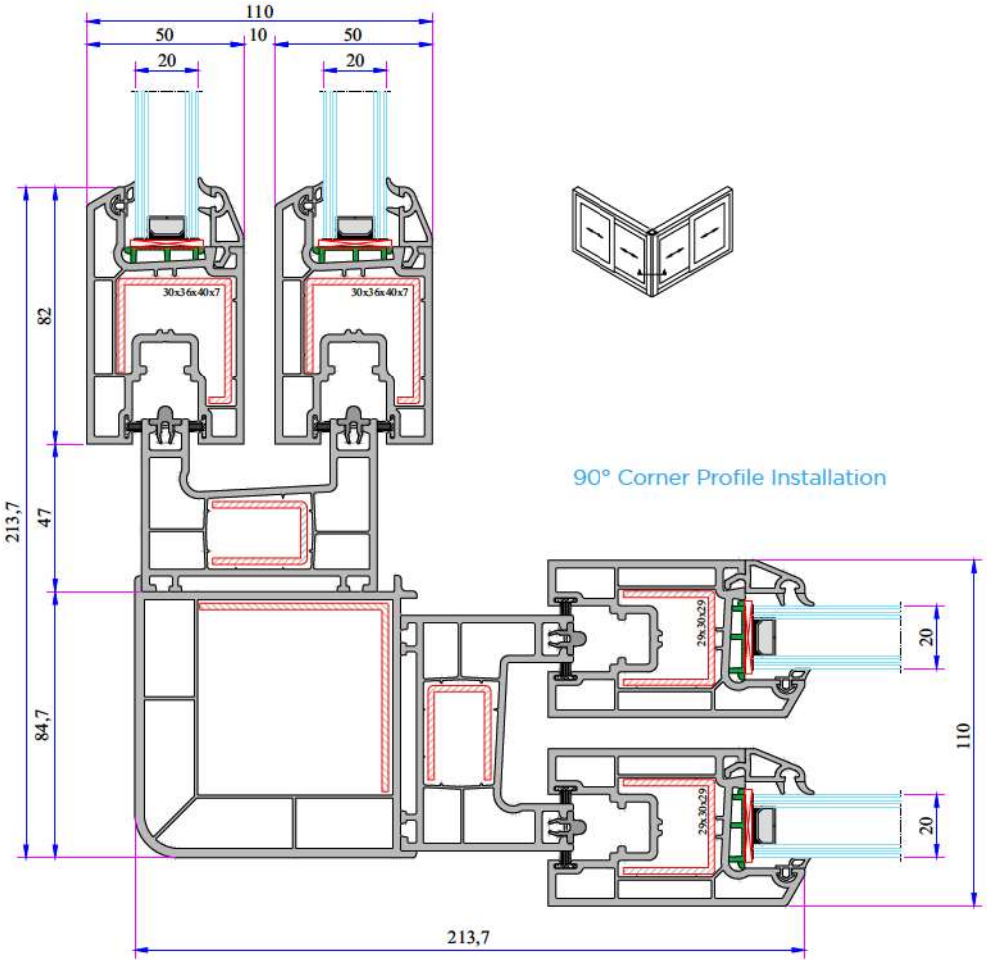

90° Corner Profile Installation

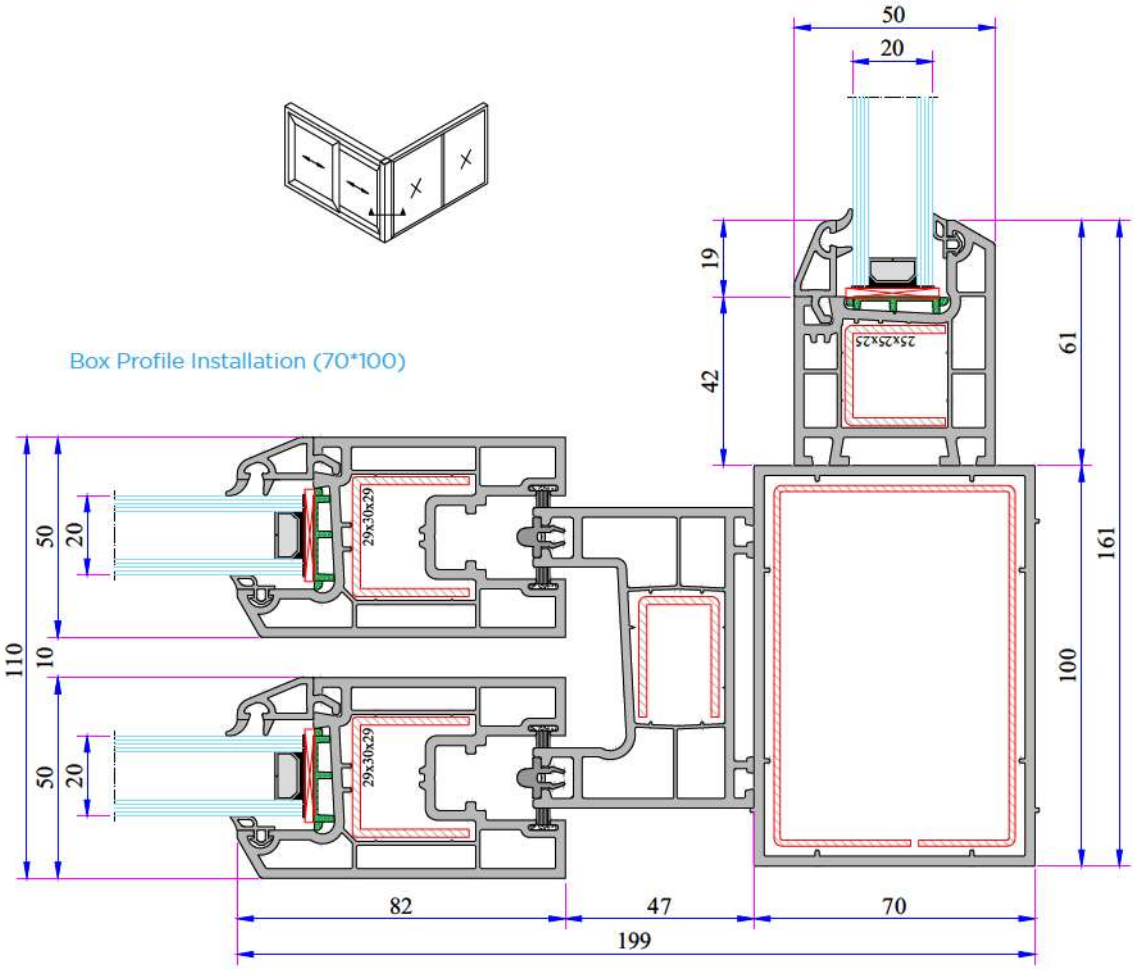

Box Profile Installation (70*100)

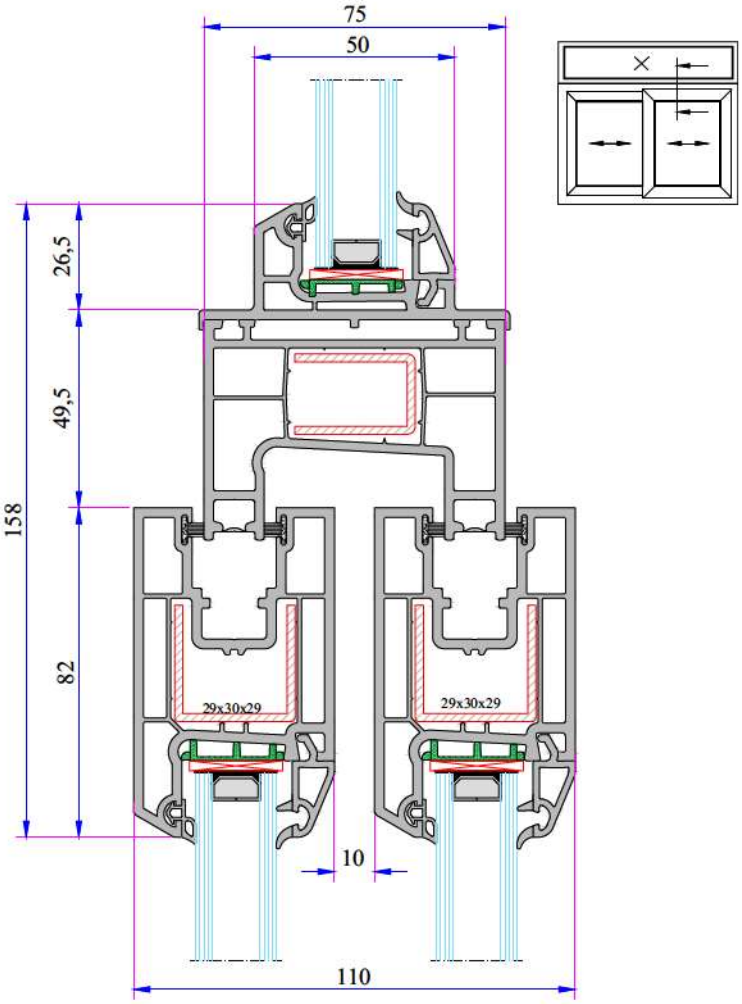

Upper Fixed Lower Part Double Railed
Sliding Installation

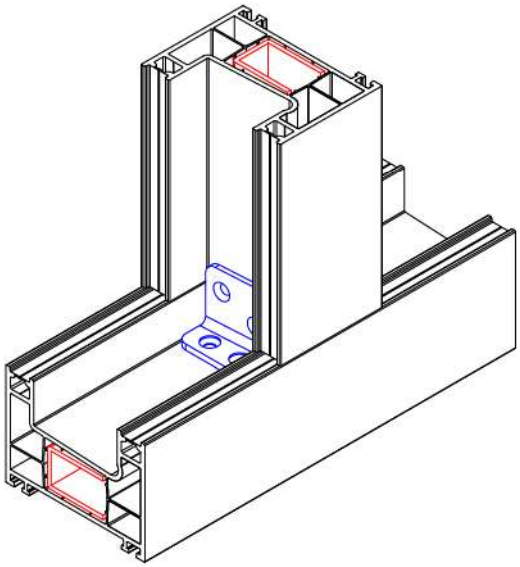

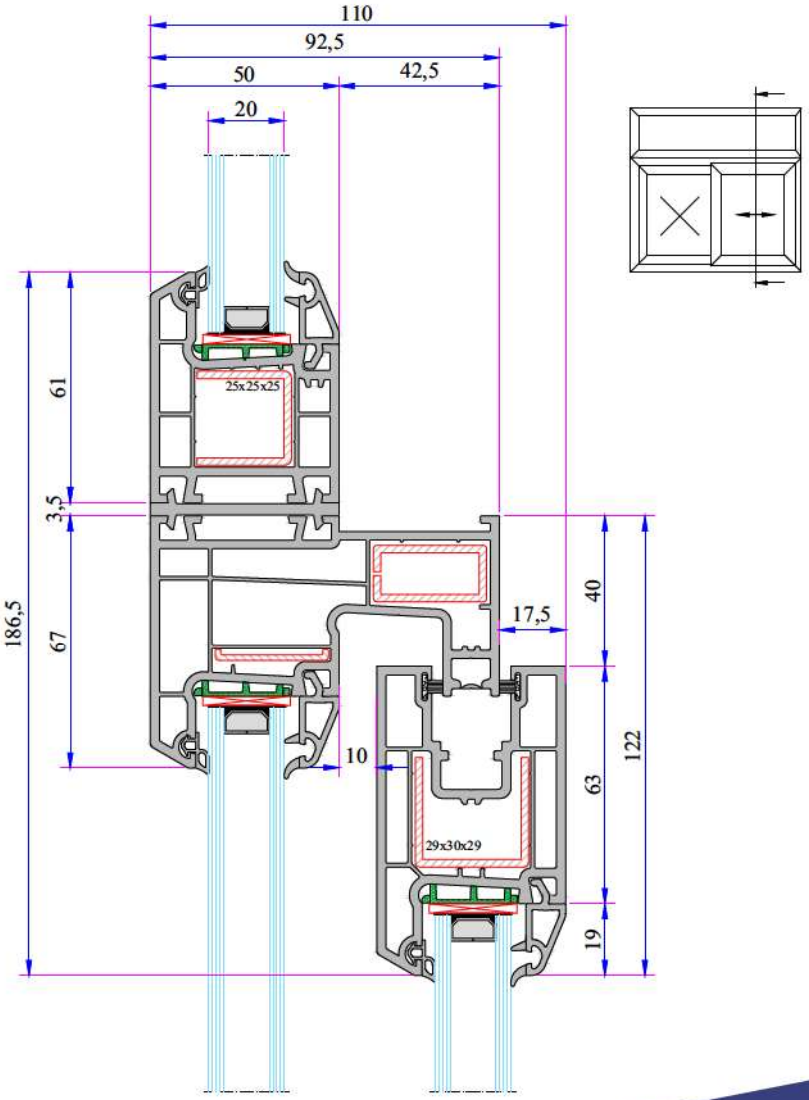

Upper Fixed Lower Part Single Railed
Sliding Installation

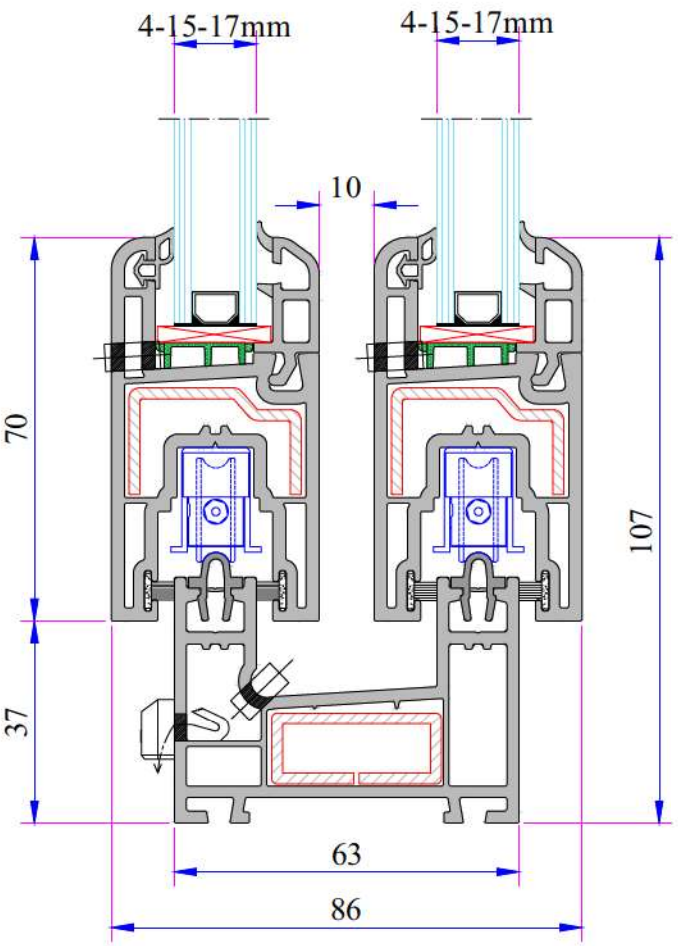

TECHNICAL

W 222 RAIL SERIES

Profile Width: 63 mm double rail frame, 111 mm triple rail frame and 38 mm sliding system sash profile.

Number of chambers: 3

Profile Class: B Class (TS EN 12608-1)

Seal Type: The installed bristle wick system

Glass Thickness (mm): 4-6, 15, 17 mm

INSTRUCTION

- 63 mm double rail, 111 mm triple rail, 38 mm sliding sash profile.
- Perfect thermal, sound and water isolation because of the 3 chambers system.
- Application of single glaze 4-6 mm and installation glass 15, 17 mm by grey sealed glazing beads in different thickness.
- Application with roller shutter and without roller shutter.
- Wooden designed laminated applications.

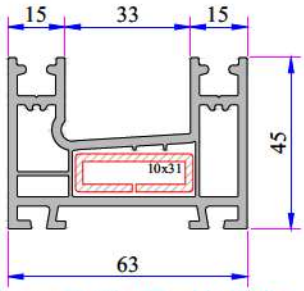

Frame Profile (Double Rail)
222.1100

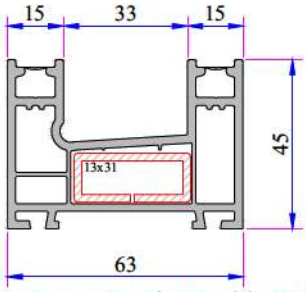

New Frame Profile (Double Rail)
222.1111

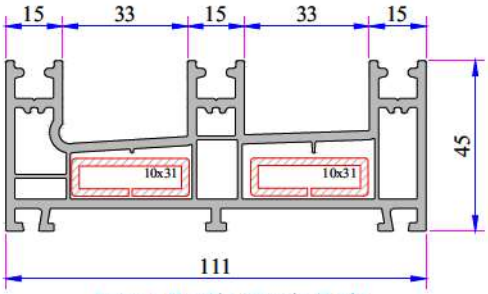

Frame Profile (Triple Rail)
222.1103

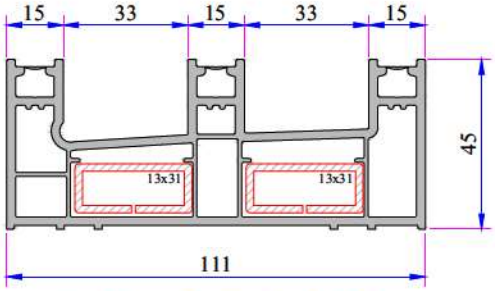

New Frame Profile (Triple Rail)
222.1112

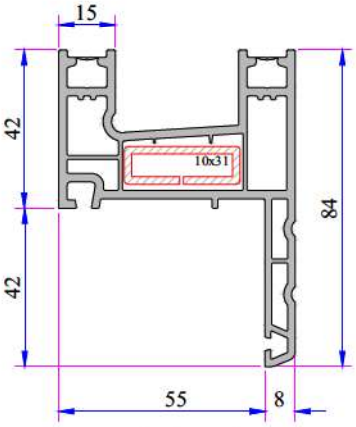

Frame With Flat-Sill Profile
222.1107
222.1107.PC (with Double Seal)

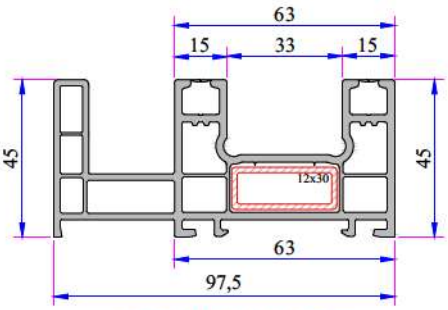

Frame With Fly-Screen
222.1113

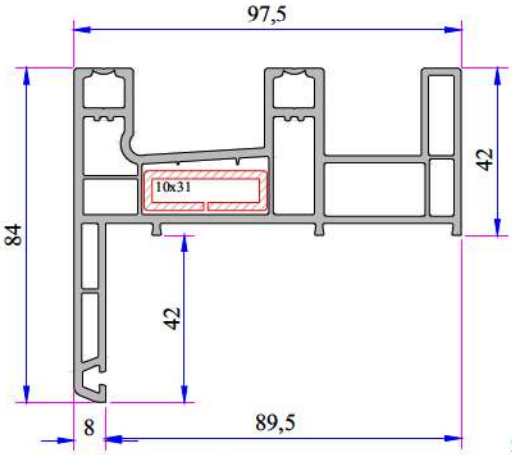

Frame With Fly-Screen&Sill
222.1109

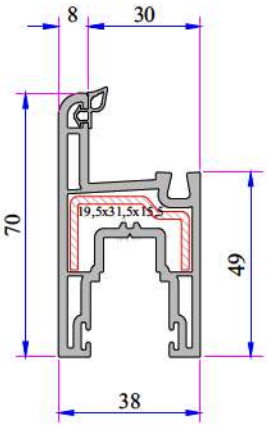

Sliding System Sash Profile
222.2300 (with Brush)
222.2301 (without Brush)

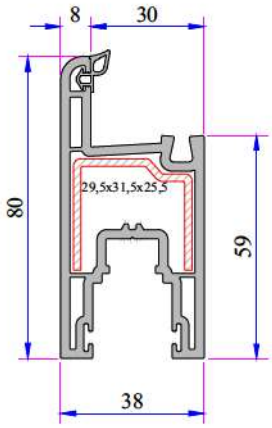

Super Sliding System
Sash Profile
222.2304 (without Brush)
222.2307 (with Brush)

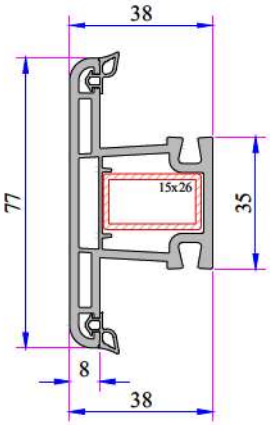

Mullion Profile for
Sash Profile
222.3201

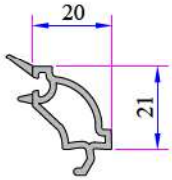

Single Glazing Bead 4-6 mm
101.4102

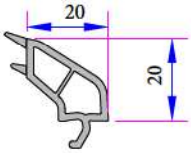

Double Glazing Bead 28 mm
101.4100

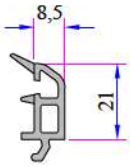

Double Glazing Bead 15 mm
532.4400

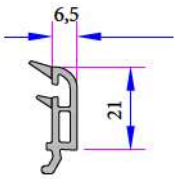

Double Glazing Bead 17 mm
532.4500

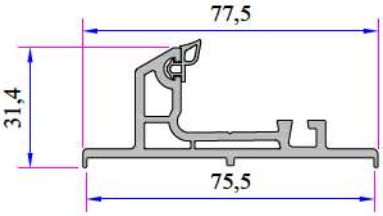

Double Rail Adaptor Profile
232.5800

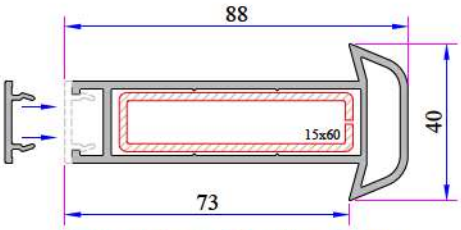

Universal Large Coupling Profile
058.5000

Universal Large Coupling
Cover Profile
900.5705

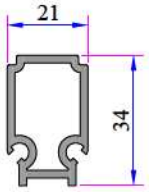

Alm. Double Sash Adaptor Profile
AD16-011

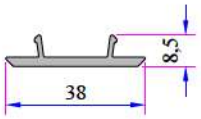

Sash Cover Profile
222.5704

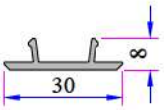

Screen Sash Cover Profile
242.5701

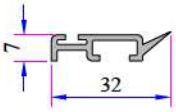

Lap Strip Profile
232.5801

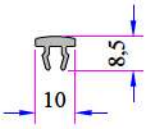

Frame Channel Cover Profile
232.5703

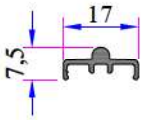

Alm. Sliding Rail Profile
AD16 053

Alm. Sliding Rail Profile
AD16-014

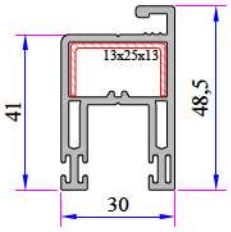

Sliding System Sash Profile
242.2305

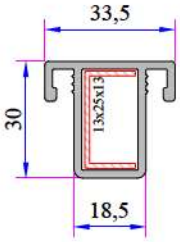

Screen Mullion Profile
242.3200

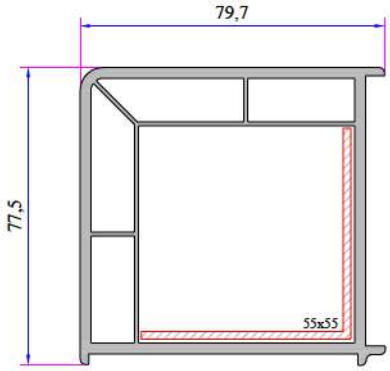

Corner Profile (90°)
070.5100

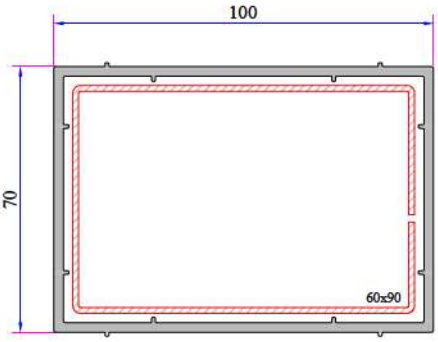

Box Profile (70*100)
070.5202

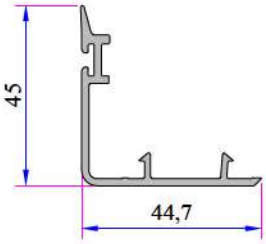

PVC Super Sash Cover Profile
222.5700

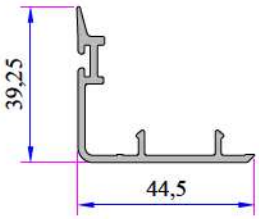

PVC Sash Cover Profile
222.5708

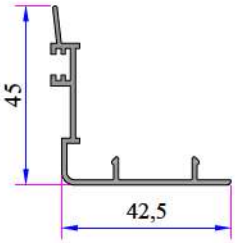

Alm. Sash Cover Profile
AD16-032

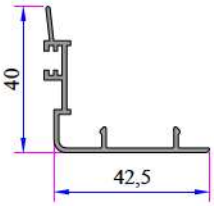

Alm. Super Sash Cover Profile
AD16-031

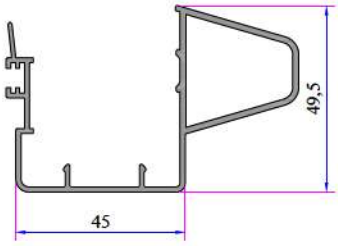

Alm. Sash Cover Grillage Profile
(In Process)

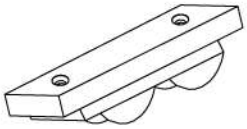

Sliding Roller Brass
34009-18030

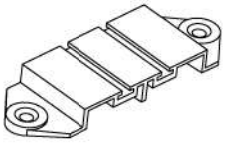

Sealing Bit Double Rail
34009-27010

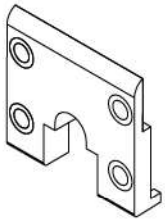

Sliding Sash End Bit
34009-47010

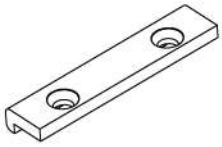

Upper Bedding Piece for Sliding Rail
34009-37010

W 222 Re-Inforcement Profiles

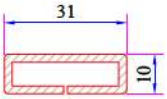

Triple Rail Frame - Frame With Flat-Sill Profile - Frame With Fly-Screen&Sill Profile Reinforcement
34022-12107

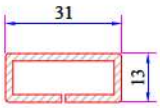

New Frame Profile (Double Rail)- New Frame Profile (Triple Rail) Profile Reinforcement
34022-12126

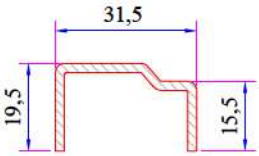

Sliding System Sash Profile Reinforcement
34022-15026

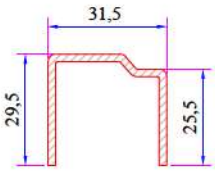

Super Sliding System Sash Profile Reinforcement
34022-15027

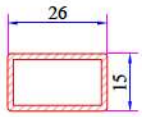

Mullion Profile for Sash
34022-12127

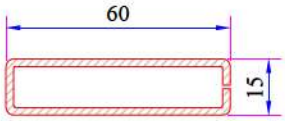

Universal Large Coupling Profile
34022-12123

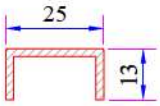

Sliding System Sash-Mullion Profile Reinforcement
34022-12008

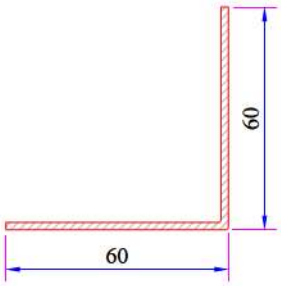

90° Corner Profile Reinforcement
34022-12306

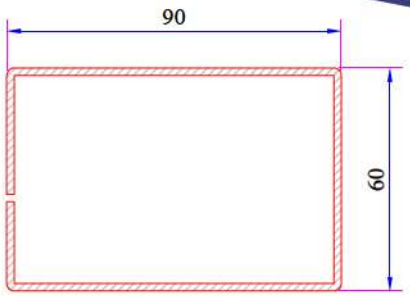

Box Profile Reinforcement
34022-12121

W 222 Installation

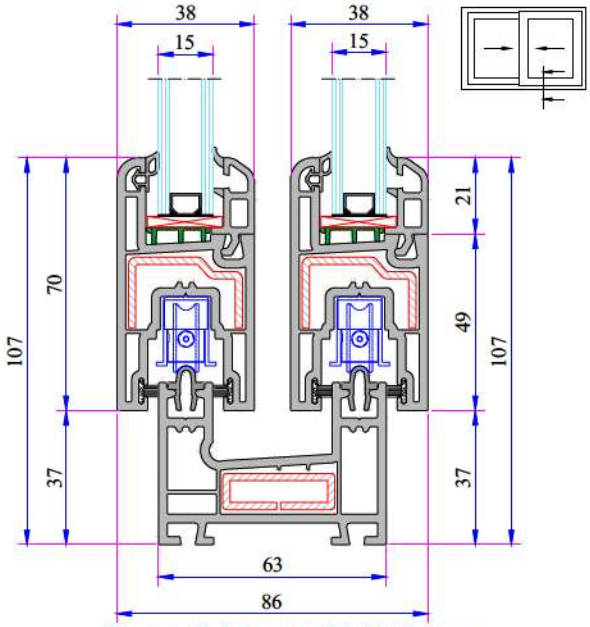

Double Rail Frame - Sliding System Sash Profile Installation

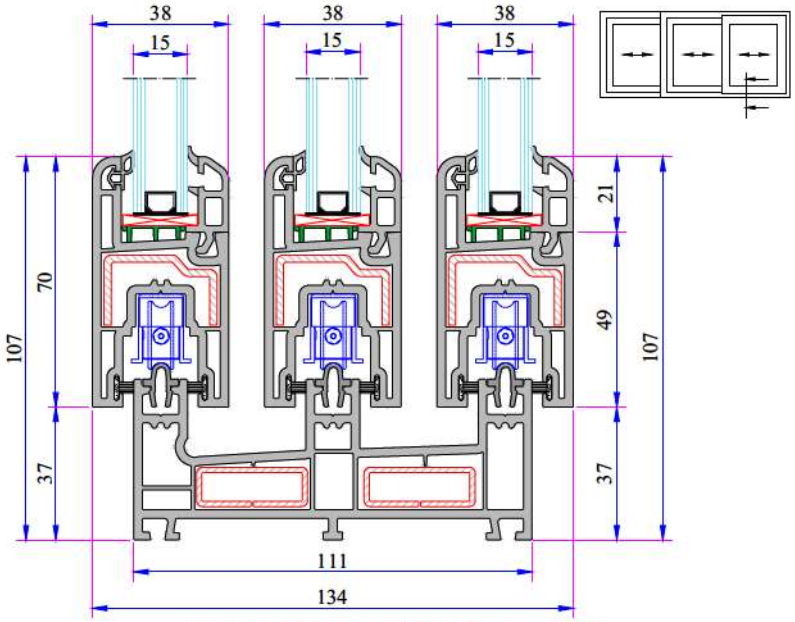

Triple Rail Frame - Sliding System Sash Profile Installation

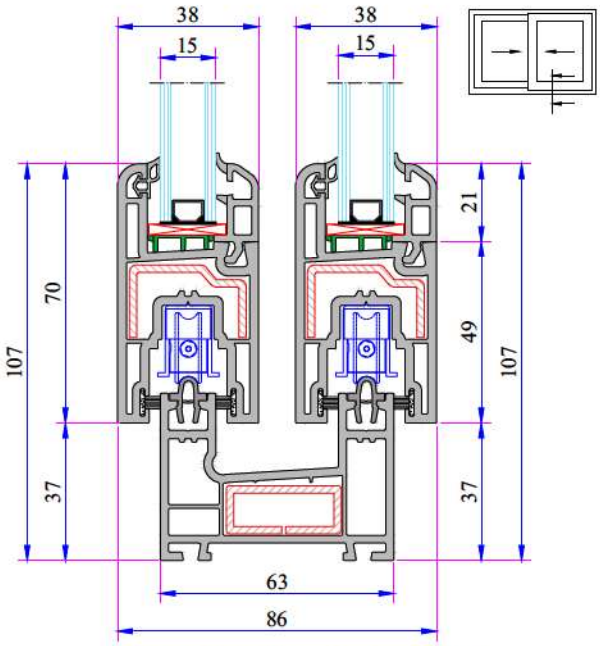

Double Rail Frame(New) - Sliding System Sash Profile Installation

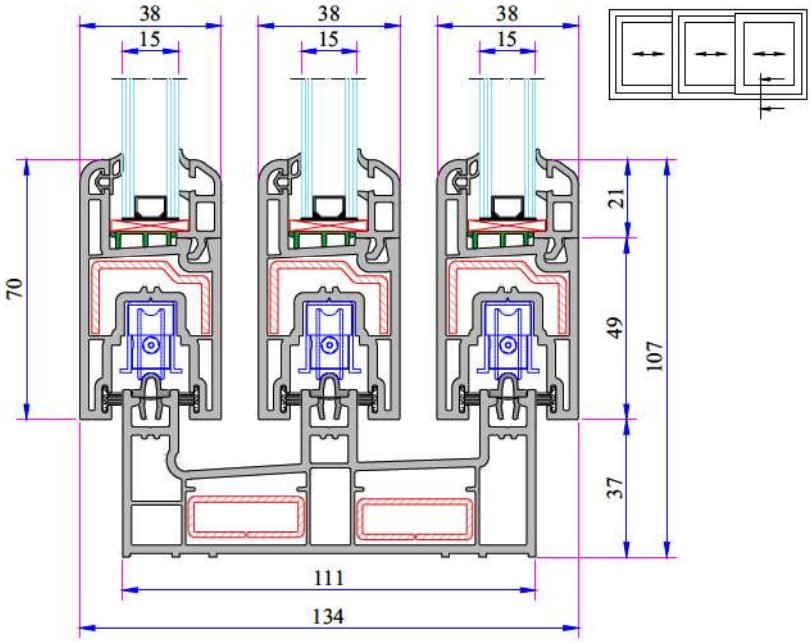

Triple Rail Frame (New) - Sliding System Sash Profile Installation

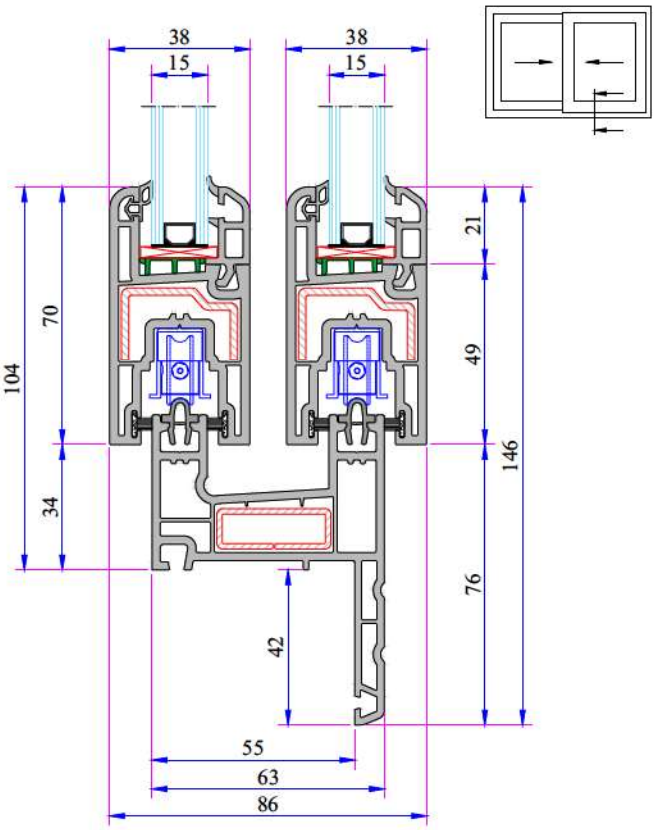

Double Rail Frame with Sill - Sliding System Sash Profile Installation

Double Rail Adaptor Profile Installation

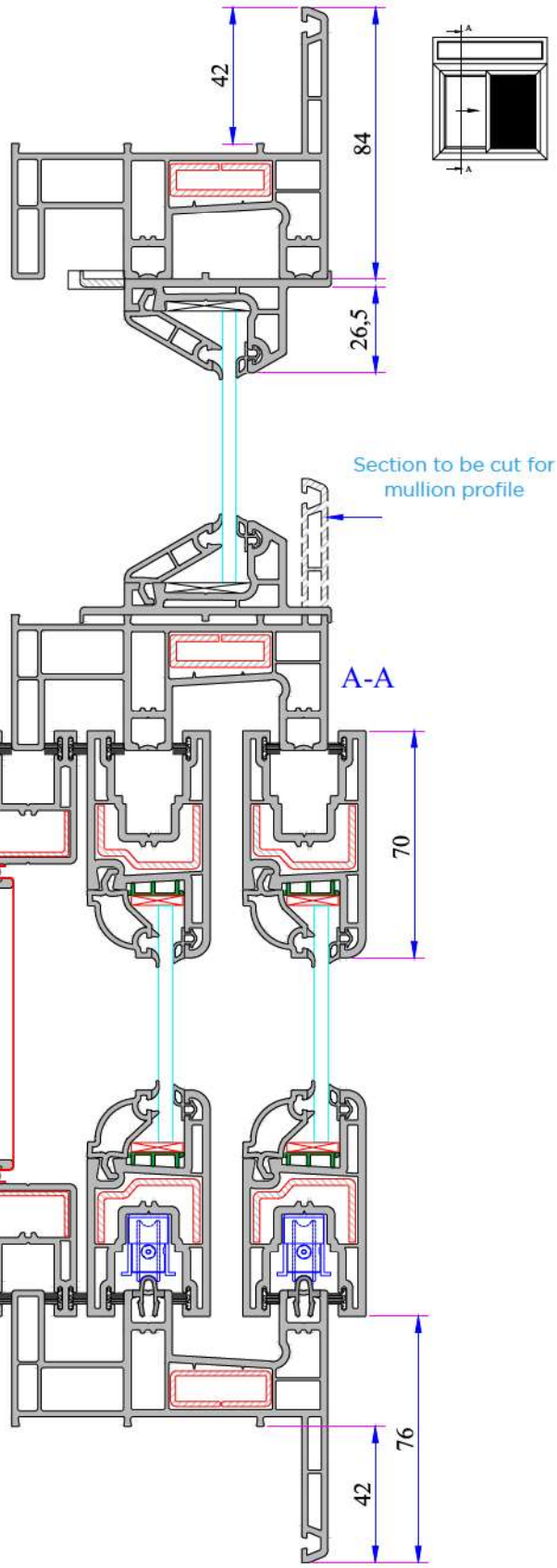

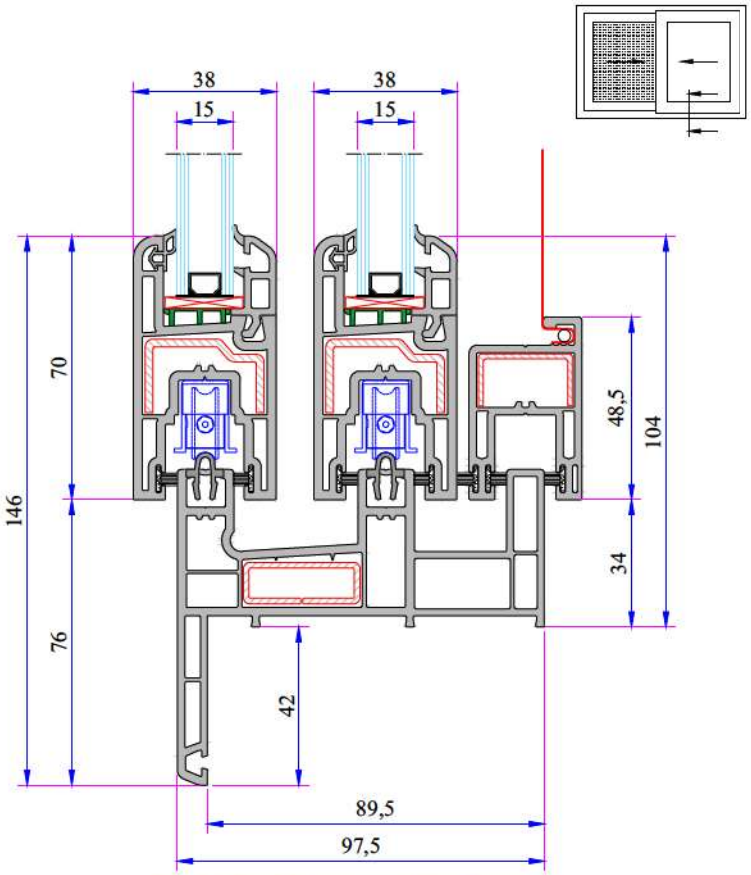

Double Rail Frame With Fly-Screen & Sill - Sliding System Sash Installation

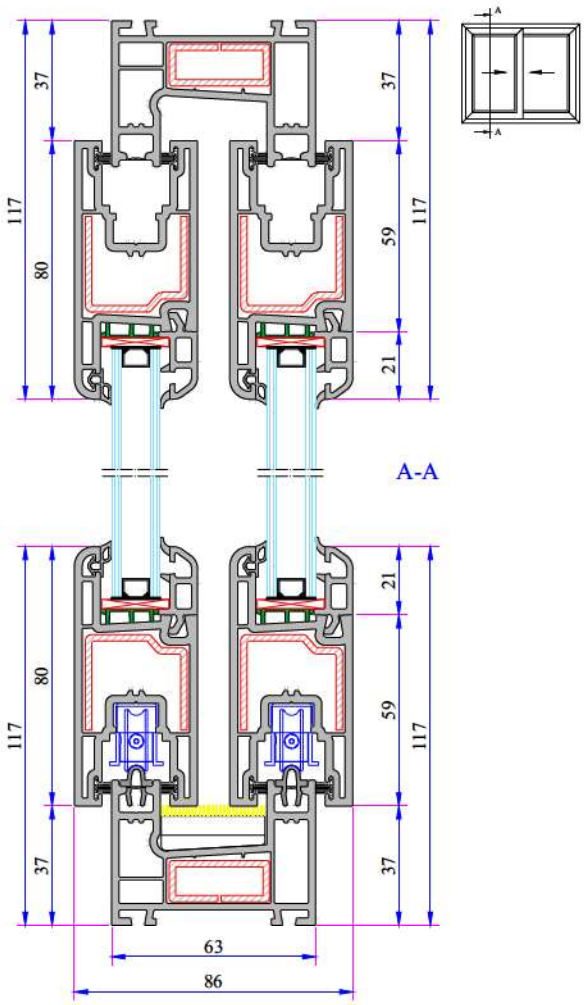

Double Railed Frame and Double Sash Installation

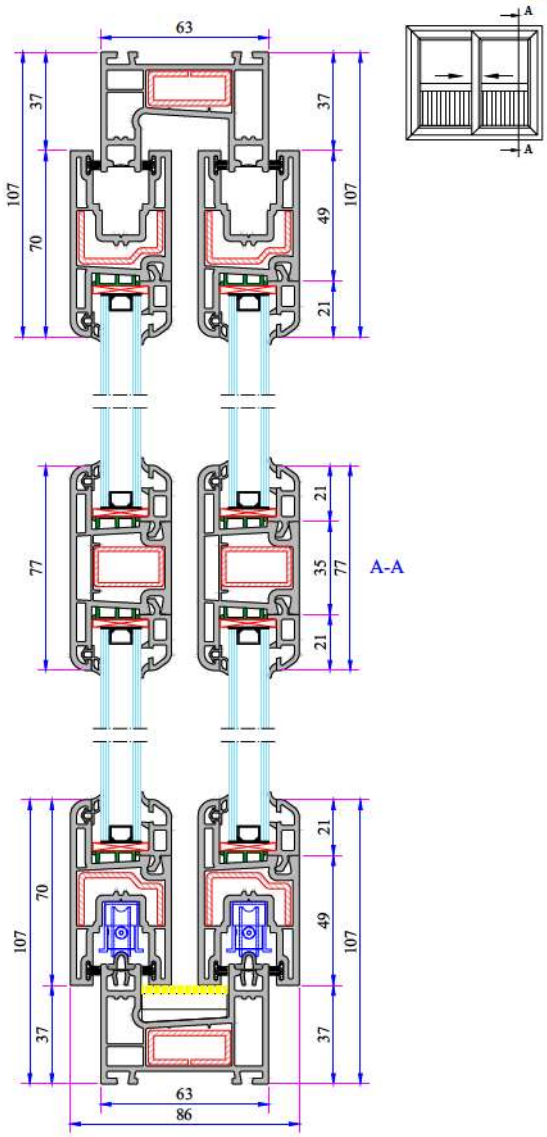

Mullion For Sash Installation

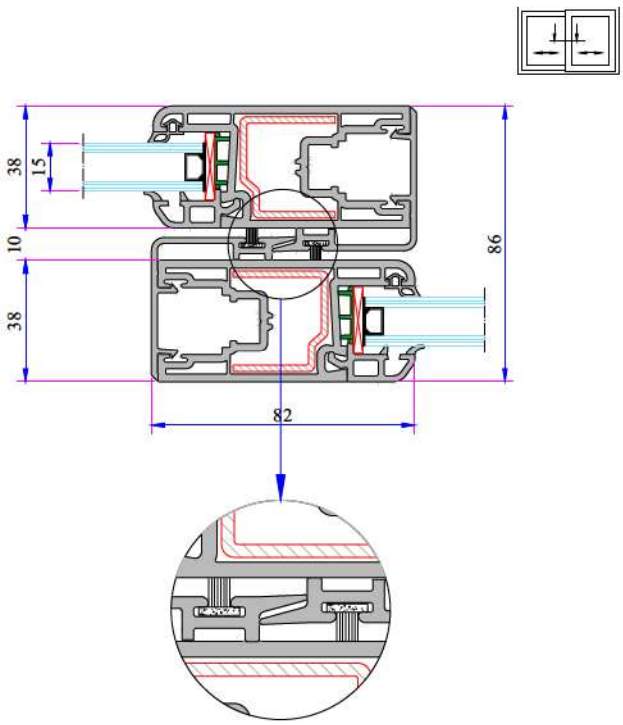

Sliding System Super Sash Back Cover Profile Installation

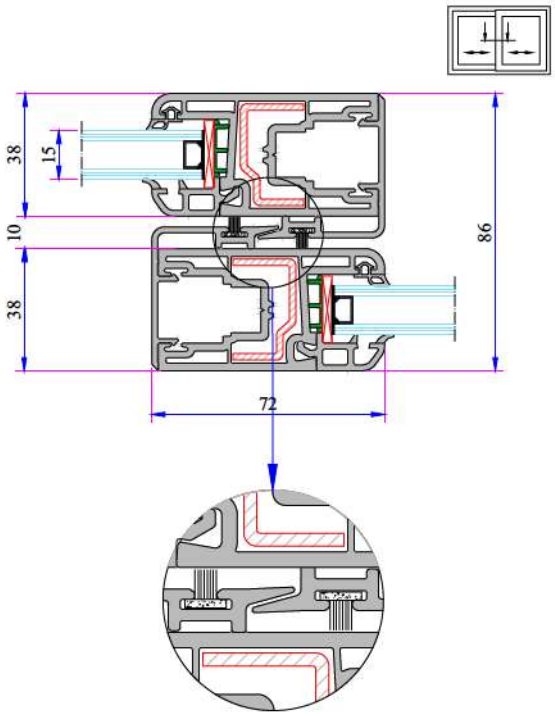

Sliding System Sash Back Cover Profile Installation

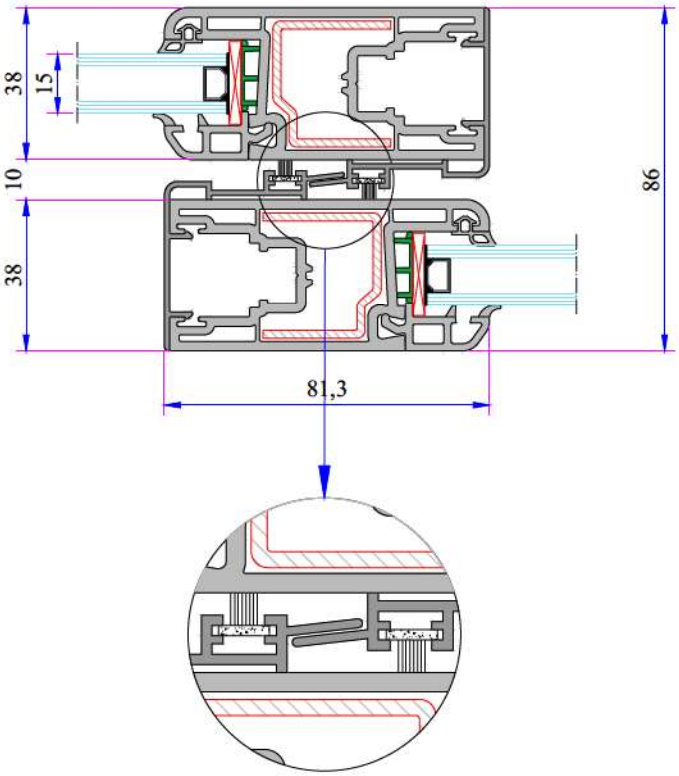

Sliding System Super Sash Alm. Back Cover Profile Installation

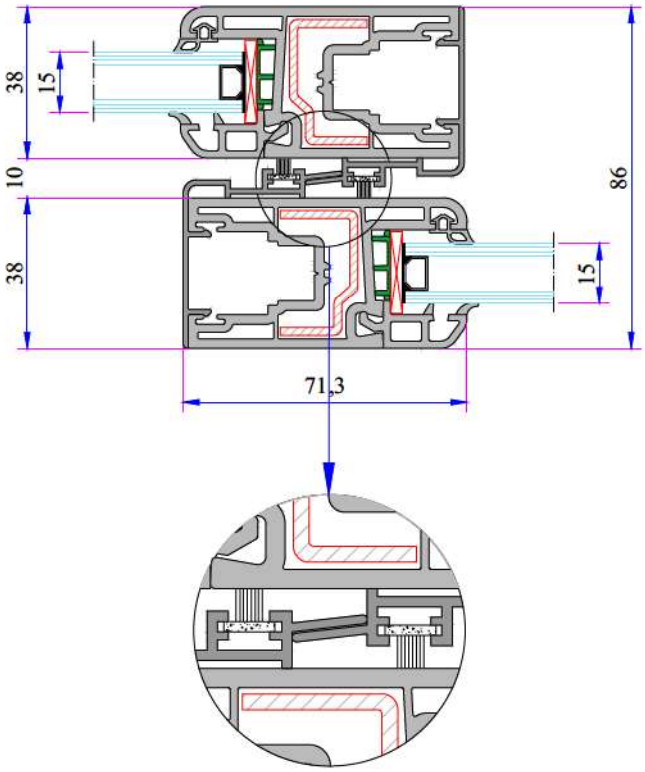

Sliding System Sash Alm. Back Cover Profile Installation

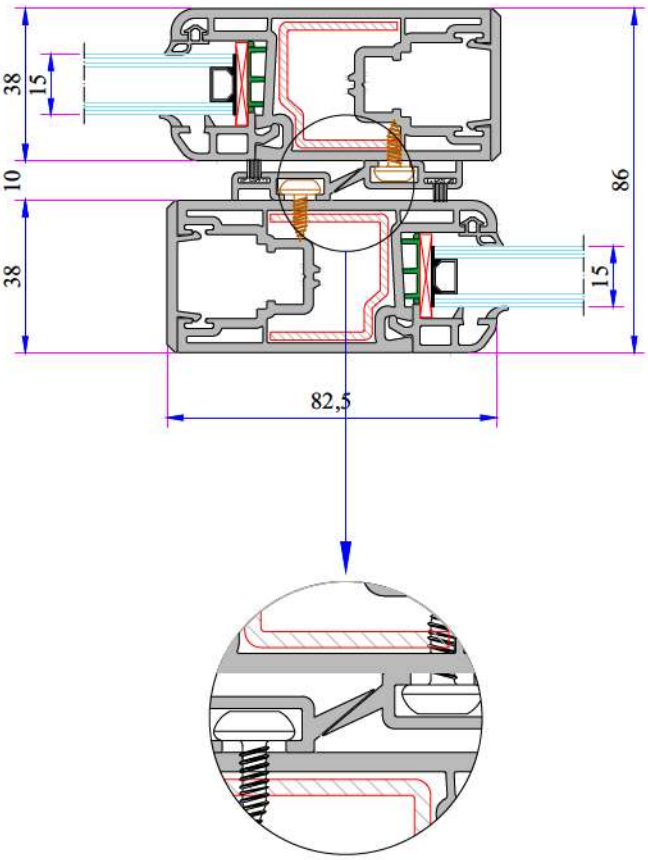

Sliding System Super Sash Lap Strip Profile Installation

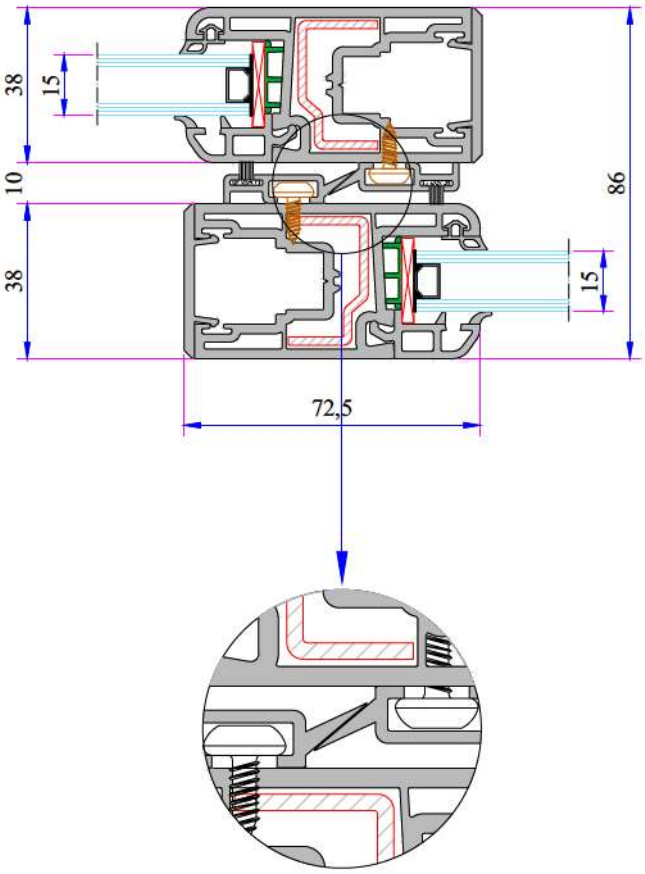

Sliding System Sash Lap Strip Profile Installation

Sliding System Super Sash - Sash
Cover Grillage Profile Installation

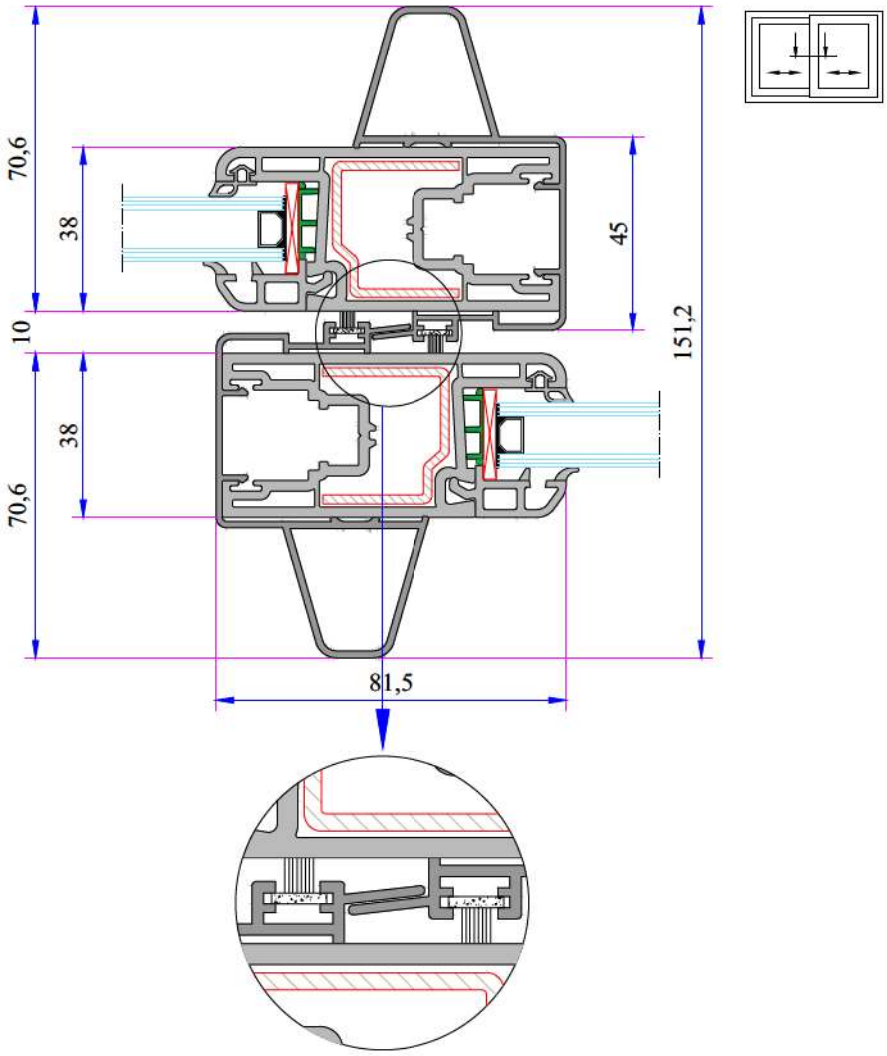

Alm. Double Sash Adaptor Profile
Installation

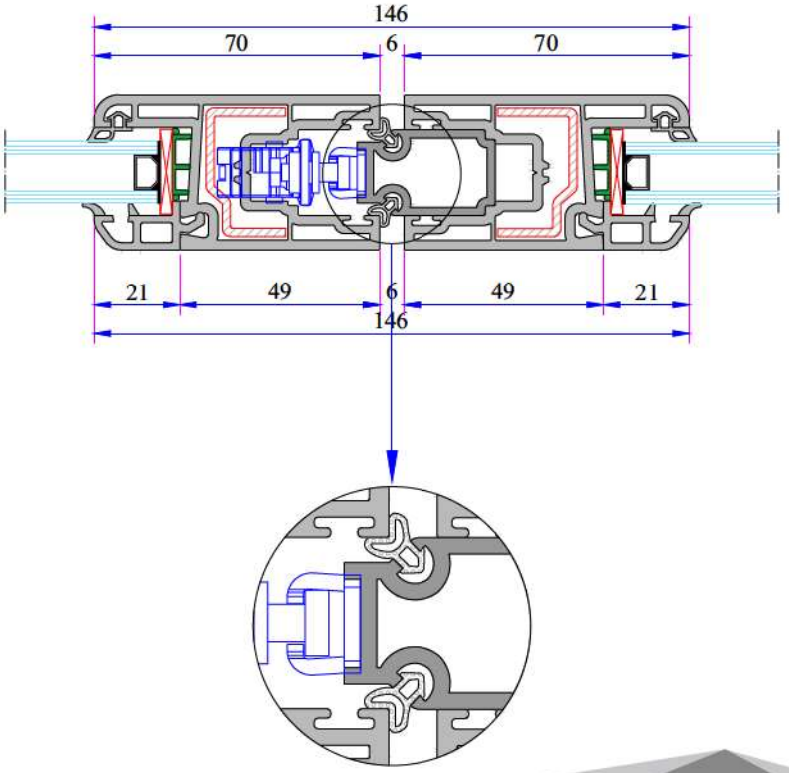

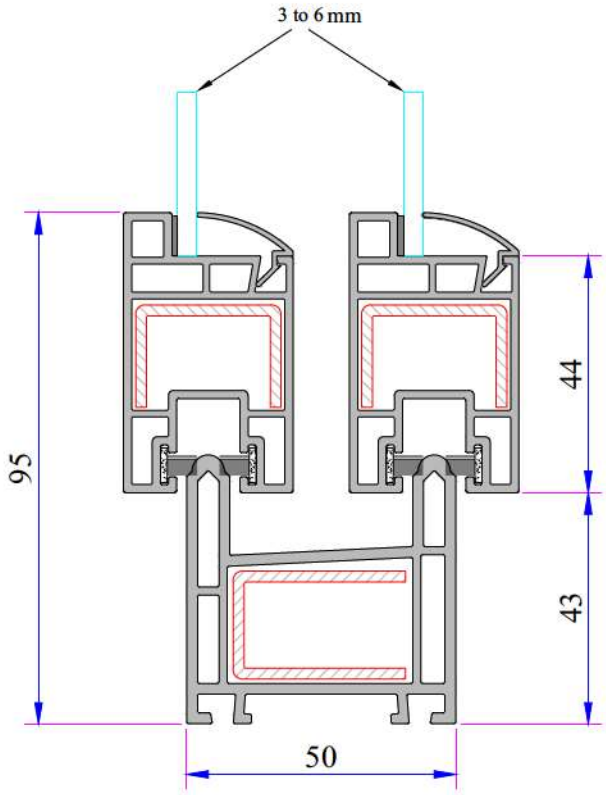

TECHNICAL

W 150 SLIDING SERIES

Profile Width: 50 mm

Number of chambers: 3

Profile Class: C Class

Seal Type: The installed bristle wick system

Glass Thickness (mm): 3 to 6 mm

INSTRUCTION

- 50 mm double rail frame and 31,5 mm sliding sash profile.
- Perfect thermal, sound and water isolation Because of the 3 chambers system.
- Single glazing (3 to 6 mm).
- Application with roller shutter and without roller shutter.
- Color range for laminated products.
- It is quality is accredited by national and international certificates.

W 150 SLIDING SERIES
PVC PROFILE SYSTEM

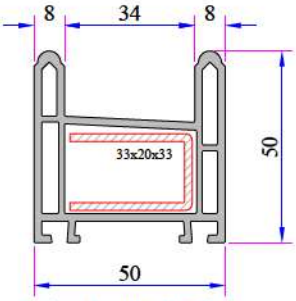

Sliding Frame Profile
150.1100

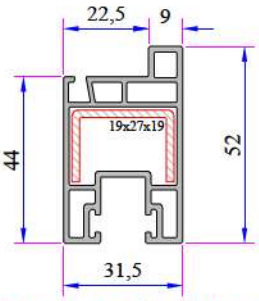

Sliding Sash Profile with Bead Channel
150.2302

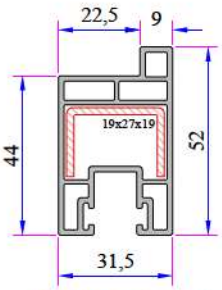

Sliding Sash Profile
150.2303

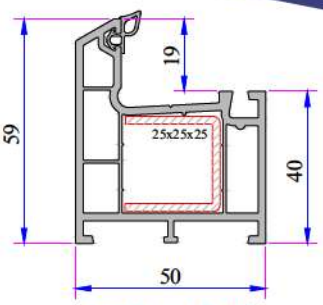

330 Frame Profile
330.1000

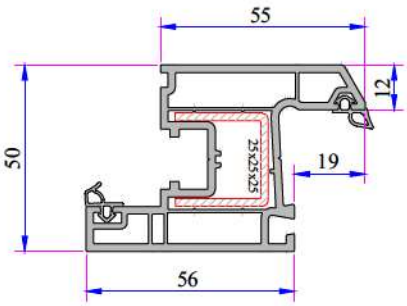

330 Sash Profile
330.2000

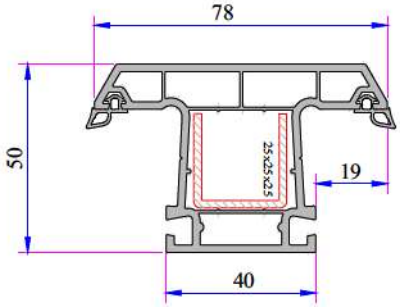

330 Mullion Profile
330.3000

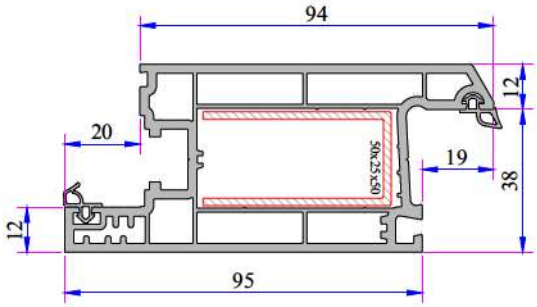

332 Door Sash Profile
332.2100

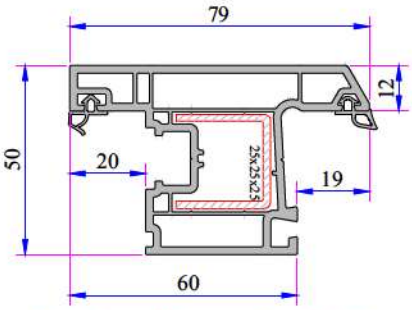

330 Outward Opening Sash Profile
330.2001

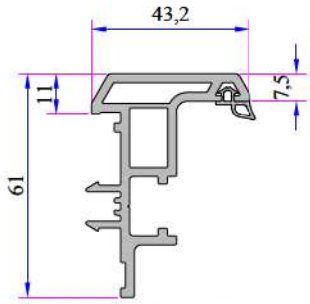

332 Lap Joint Profile
332.3100

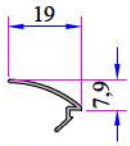

Single Glazing Bead
150.4701

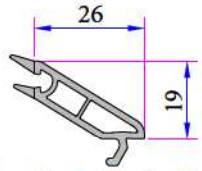

4mm Single Glazing Bead
332.4000

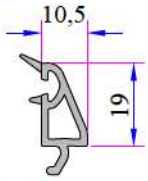

20mm Double Glazing Bead
332.4100

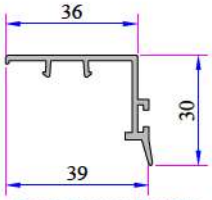

Sash Cover Profile
150.5700

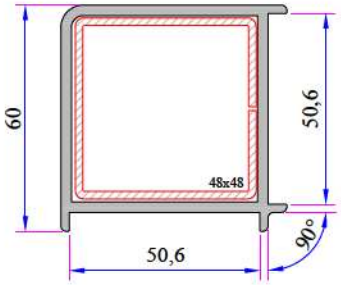

Corner Profile (90°)
050.5100

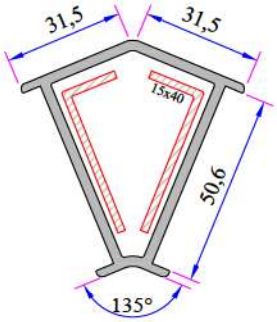

Corner Profile (135°)
050.5102

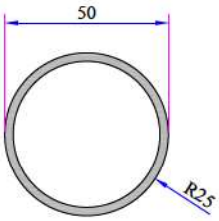

Angled Pipe Profile (Ø50)
050.5105

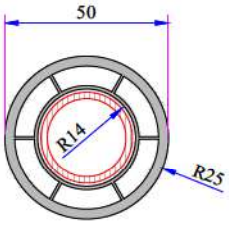

Angled Pipe Profile (Ø50)
050.5106

Universal Large Coupling Cover Profile
058.5707

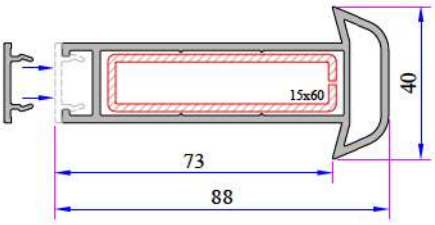

Universal Large Coupling Profile
058.5000

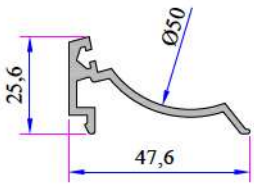

Alm. Angled Pipe Adaptor Profile
(In Process)

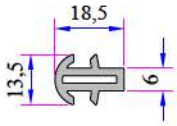

Short Coupling Profile
099.5003

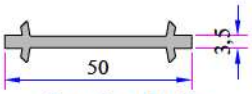

Coupling Profile
050.5001

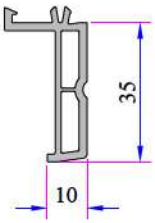

35mm Frame Sill Profile
099.5523

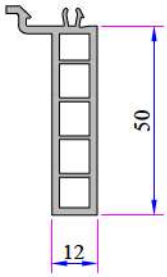

50mm Frame Sill Profile
099.5524

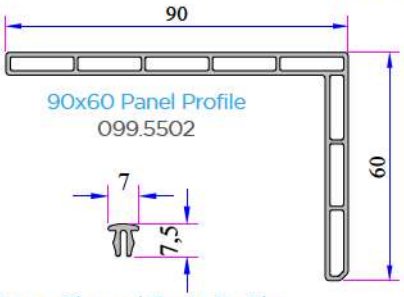

90x60 Panel Profile
099.5502

Frame Channel Cover Profile
099.5703

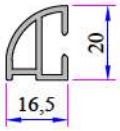

Offset Profile
900.6307

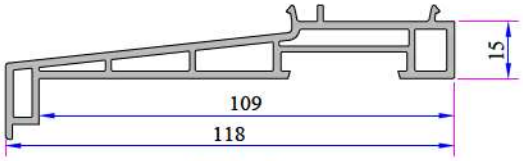

Sill Profile
058.5504

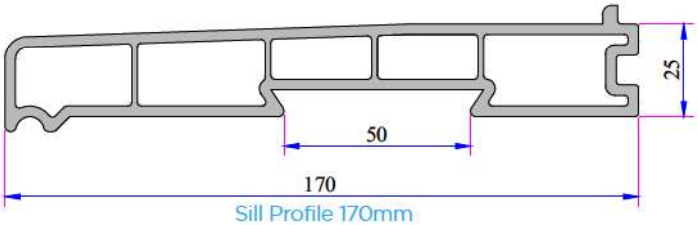

Sill Profile 170mm
099.5513

W 150 Sliding Re-Inforcement Profiles

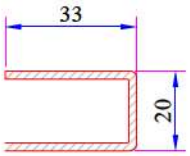

Sliding Frame Profile Reinforcement
34022-12019

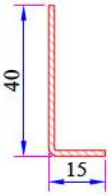

Corner Profile (135°)
34022-12301

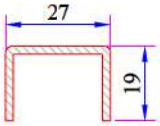

Sliding Sash Profile Reinforcement
34022-12028

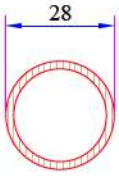

Angled Pipe Profile Reinforcement
34022-12503

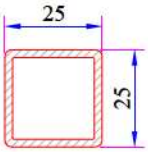

Frame, Mullion Profile Static Reinforcement
34022-12122

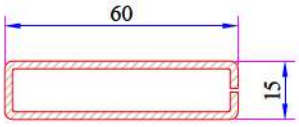

Universal Large Coupling Profile Reinforcement
34022-12123

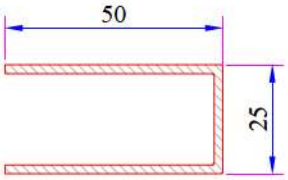

Door Sash Profile Reinforcement
34022-12012

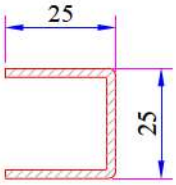

330 Frame, Sash, Mullion, Outward Opening Sash Profile Reinforcement
34022-12003

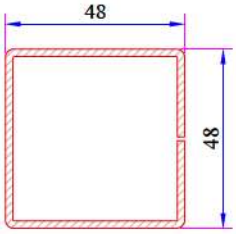

Corner Profile (90°)
34022-12101

W 150 Sliding Installation

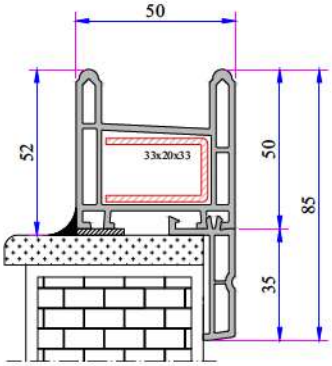

35mm Frame Sill Profile Installation

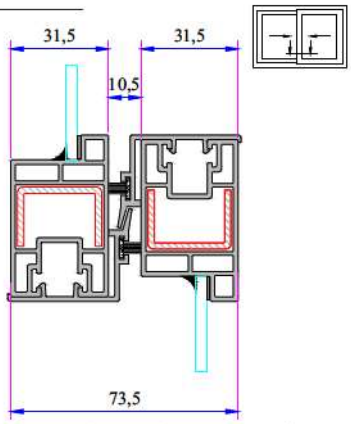

Sliding Sash - Sash Cover Profile Installation

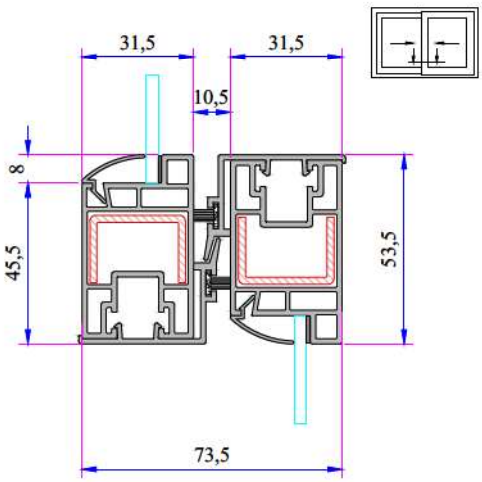

Sliding Sash - Sash Cover Profile Installation

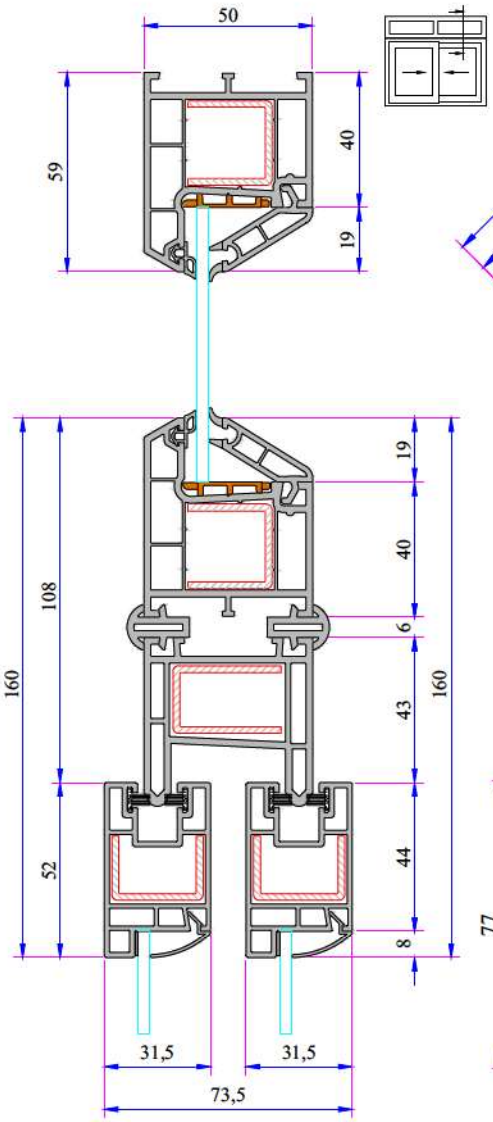

Sliding Frame - 330 Frame Installation

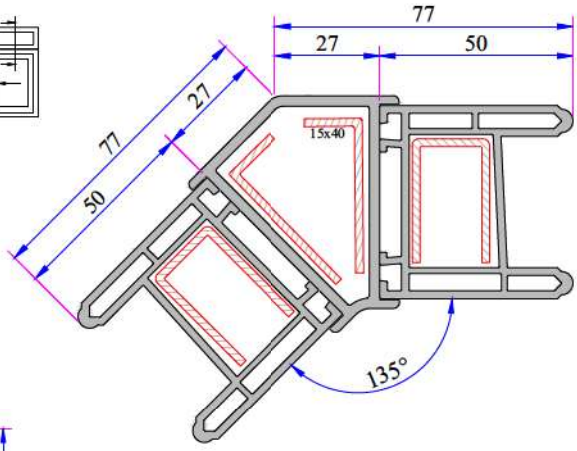

135° Corner Profile Installation

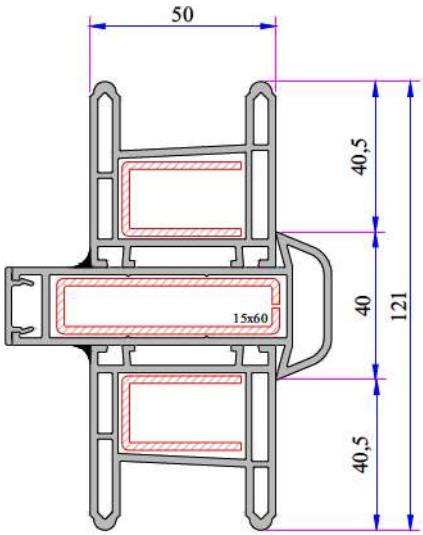

Universal Large Coupling Profile Installation

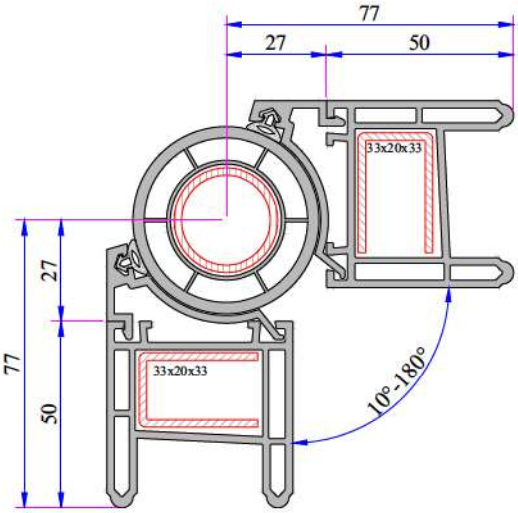

Corner And Pipe Profile Installation

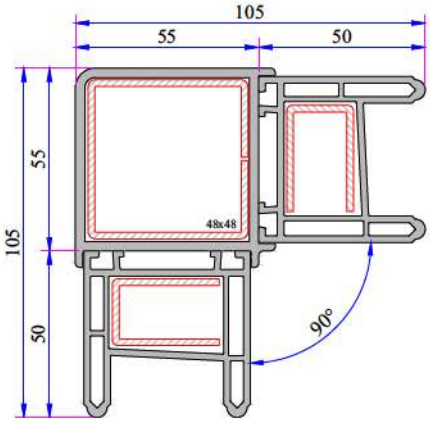

90° Corner Profile Installation

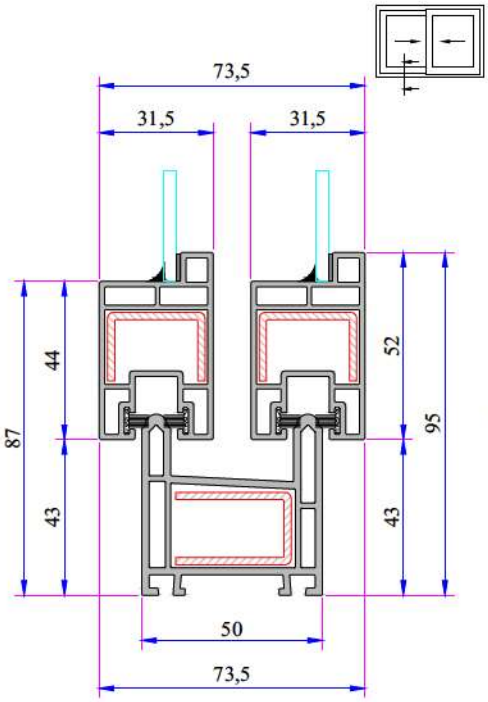

Sliding Frame Profile - Sliding Sash Profile Installation

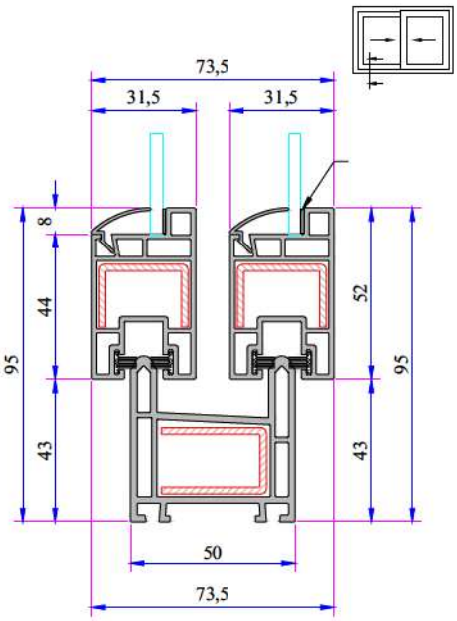

Sliding Frame Profile - Sliding Sash Profile Installation

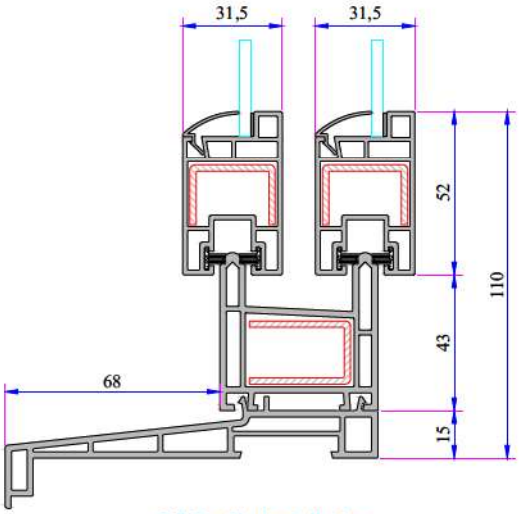

Sill Profile Installation

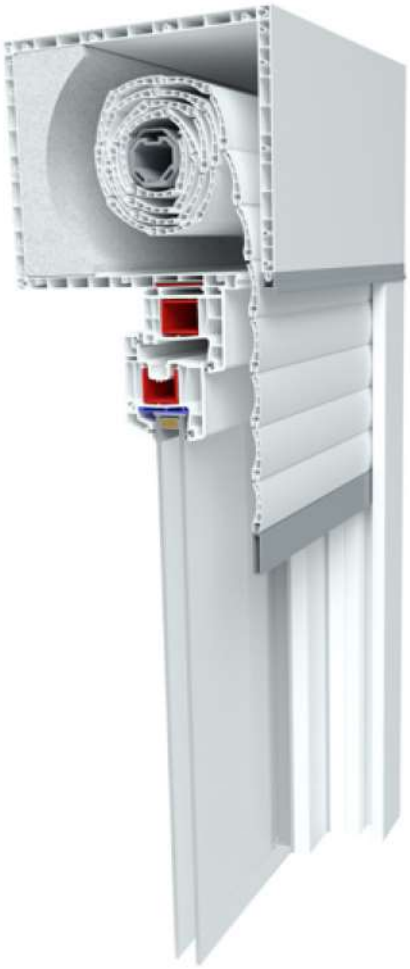

INSTRUCTION

ADO ROLLER SHUTTER PROFILE SERIES

· With 190 x 190 mm, 190 x 225 mm, 225 x 225 mm 155 x 155 mm 4 different type of boxes give us possibility to work on desired wall thickness, width and height due to 190 x 225 mm ve 225 x 225 mm boxes, it has a chance to use roller shutter with heat insulation.

· It provides the possibility of installation inside and outside the wall. The installation of blade and maintenance - is possible from inside for all kinds room of renovation.

· It can be applied with motor, remote control and manual cord.

· The sliding rails are available with blade of roller shutter of measurements 37 mm, 39 mm, 42 mm, 50 mm, 55 mm.

190x190mm BOX OF RULLER SHUTTER

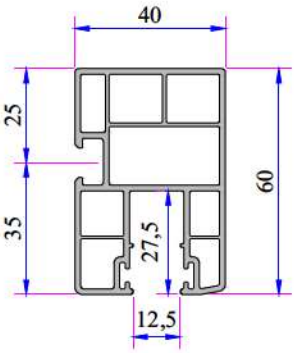

37 mm Blade Side Rail
097.5602

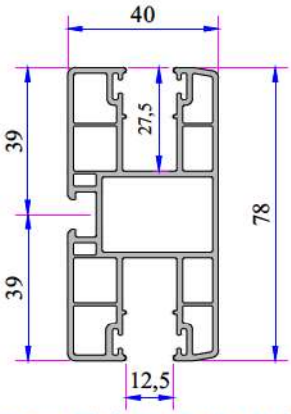

37 mm Blade For Center Rail
097.5603

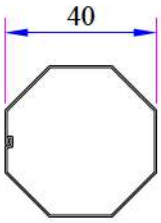

Shutter Rewinding Drum
Galvanized
34019-41040

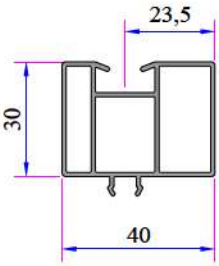

Shutter Side Rail
Lifting Profile
21108-01000

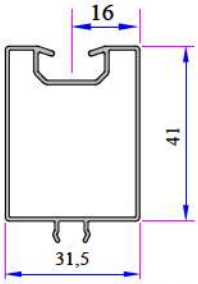

Shutter Side Rail
Lifting Profile
AD16-050

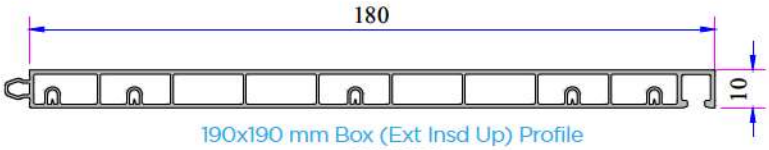

190x190 mm Box (Ext Insd Up) Profile
097.5601

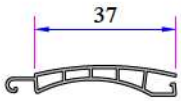

37mm Shutter Blade
P.PNJ 1.37.IH.10

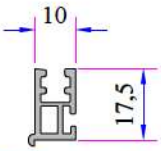

PVC Bumber Bead
097.5605

190x190 mm Box Profile
097.5600

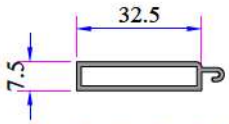

Alm. Shutter Blade For
Weight
16012.601.5.1.1.9016

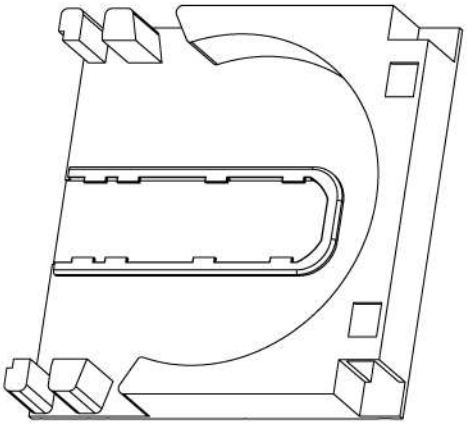

190x190 mm Shutter Side Cover
34019-11240

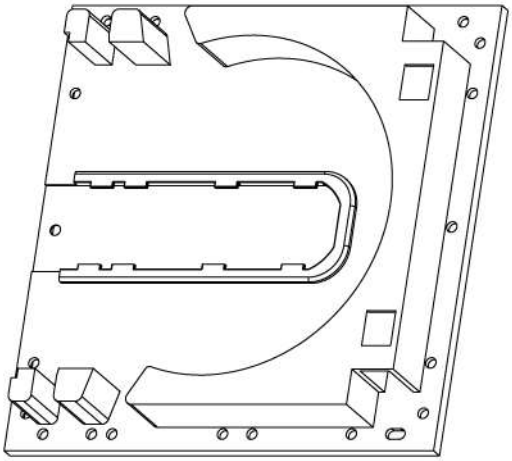

190x190 mm Shutter Middle Cover
34019-11210

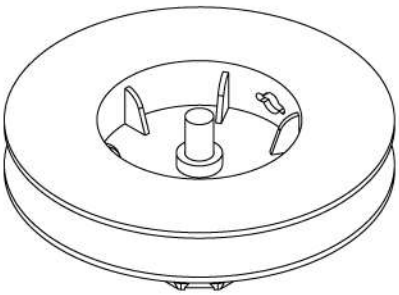

Big Roller
34019-11280

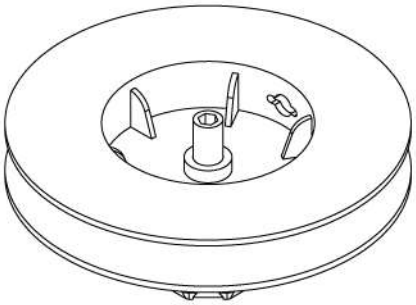

Big Roller(Controlled By Unique Control Point)
34019-11420

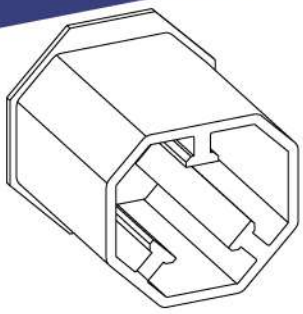

Shutter 40x60 Muff
34019-11300

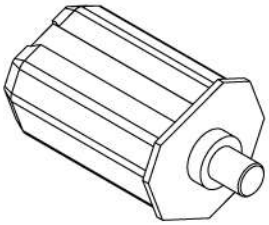

Shutter Small Roller
34019-11290

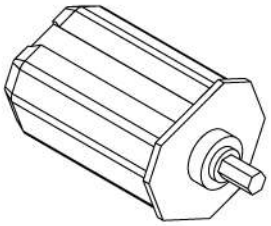

Small Roller Controlled By Unique Control Point)
34019-11410

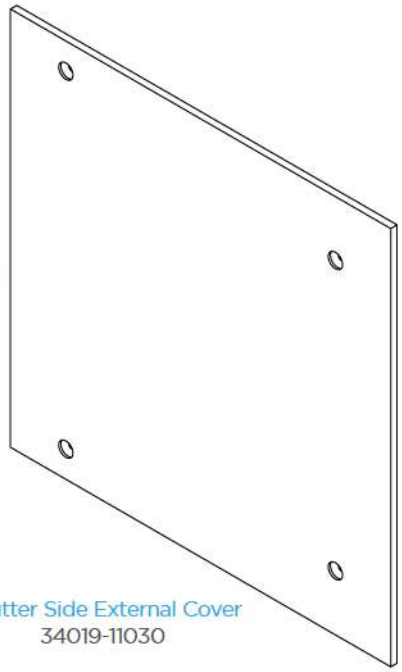

Shutter Side External Cover
34019-11030

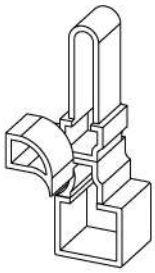

Shutter Rail On Side
34019-11110

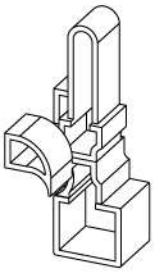

Shutter Rail In The Middle
34019-11310

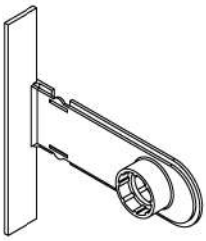

Shutter Side and Middle Roller
34019-11250

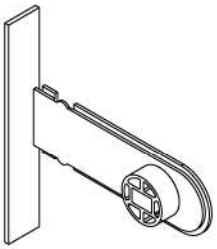

Shutter Side and Middle Roller (It Is For Motorized Roller Shutter)
34019-11260

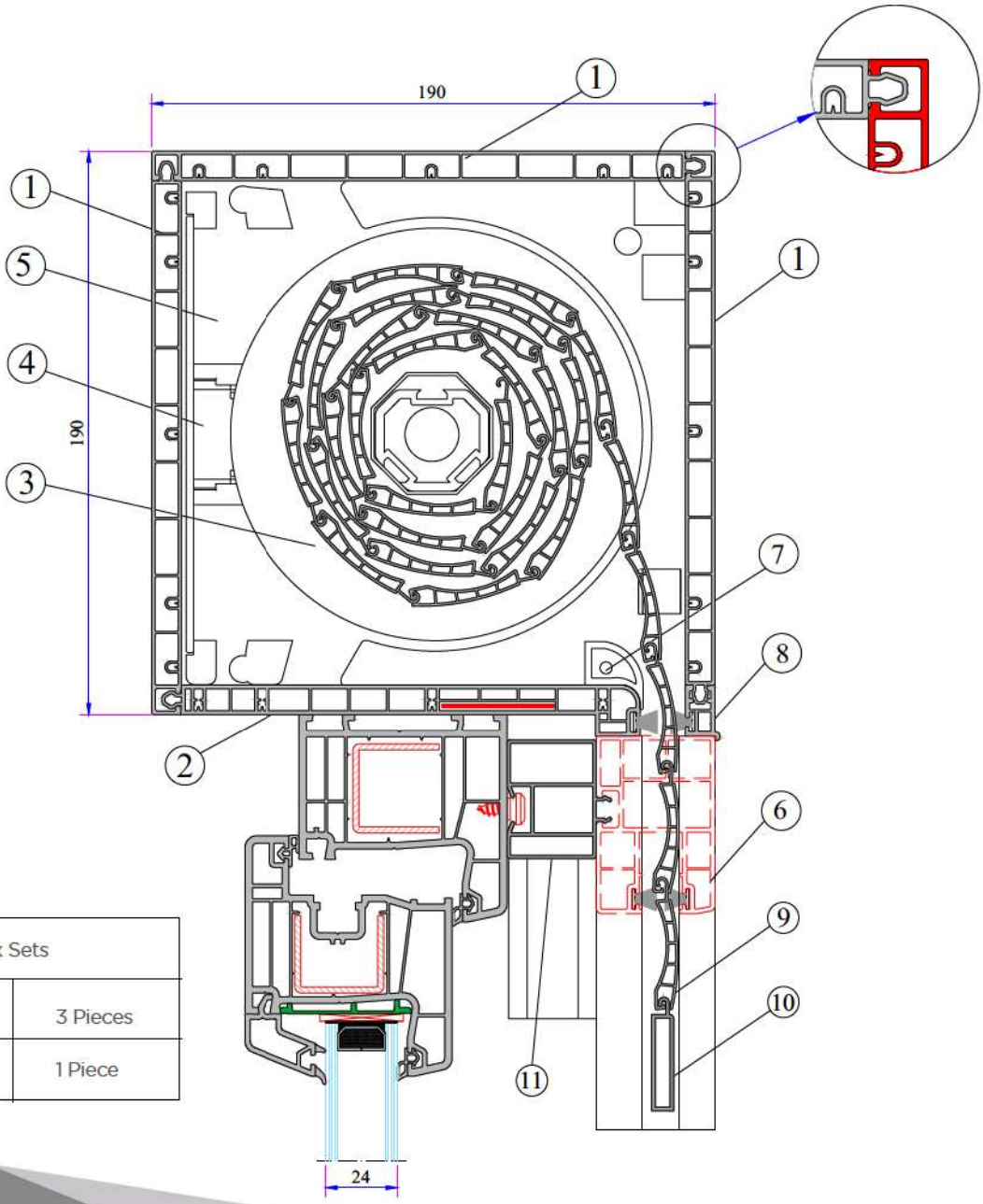

1- Box External - Superior - Inner profile
2- Bottom Box profile
3- Big Roller
4- Side cover sled
5- Side Cover
6- New side rail
7- Rails beading sled (Right -Left)
8- PVC Bumber Bead
9- Shutter blade
10- Alm. Blade for the weight
11- Middle Fly Screen with Pile Profile

190x190mm Roller Shutter Box Sets	
Roller Shutter, Inner External and Superior Box Profile	3 Pieces
Roller Shutter Lower Box Profile	1 Piece

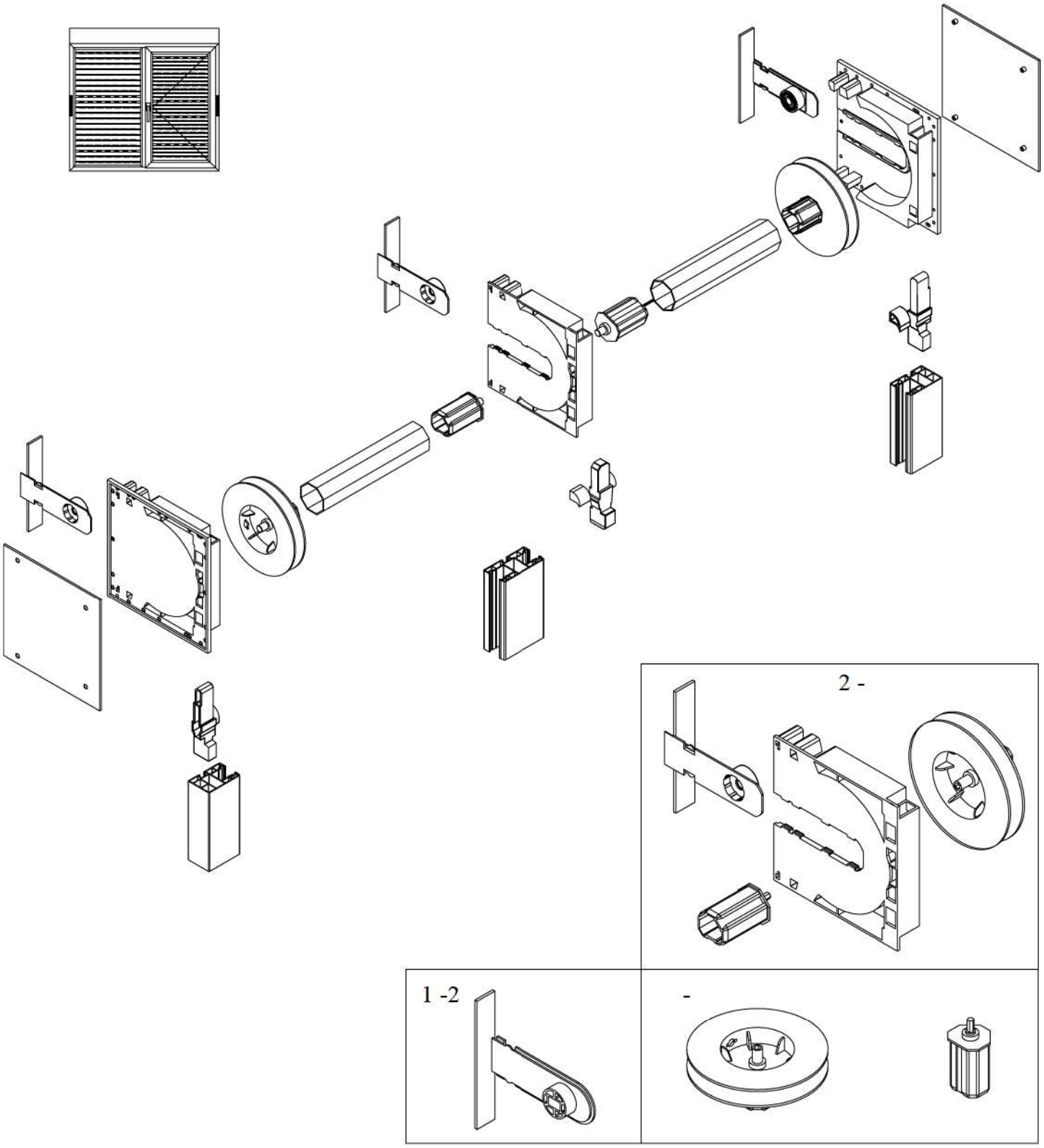

Notes:

1. In case of motorized roller shutter use, only the inner side of the roller bearing should be selected as rectangular. The picture is upwards section.

2. The single-point controlled (which does not matter whether it is corded or motorized) roller shutters including 2, 3, 4 pieces will have the option of transferring the small and large roller at each crossing point. The small and large rollers pass each other with hexagonal heads.

190x225mm INSULATED ROLLER SHUTTER BOXES

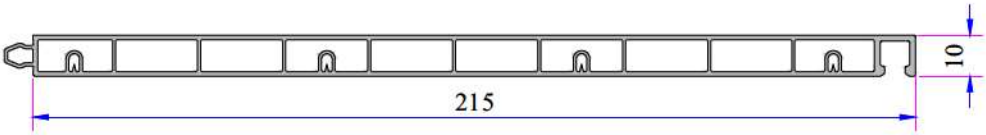

190x225 Insulated Above Side Box Profile
097.5611

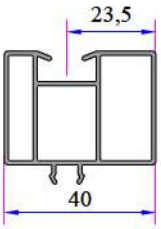

Shutter Side Rail
Lifting Profile
21108-01000

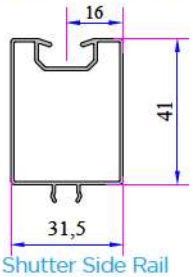

Shutter Side Rail
Lifting Profile
AD16-050

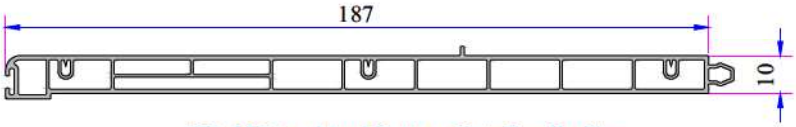

190x225 Insulated Buttom Side Box Profile
097.5612

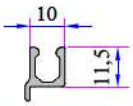

Alm. Bumber Bead
16036.601.5.1.1.9016

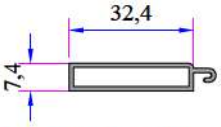

Alm. Blade For Weight
16012.601.5.1.1.9016

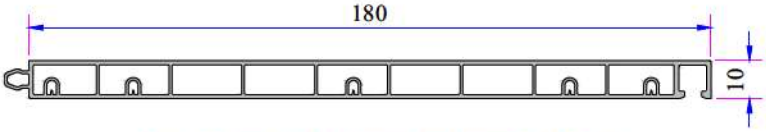

190x225 Insulated External And Inner Box Profile
097.5601

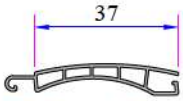

37' Shutter Blade
P.PNJ 1.37.IH.10

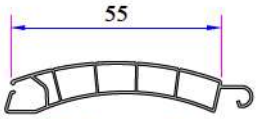

55' Shutter Blade
P.PNJ 1.55.10

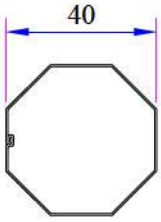

Shutter Rewinding Drum
Galvanized
34019-41040

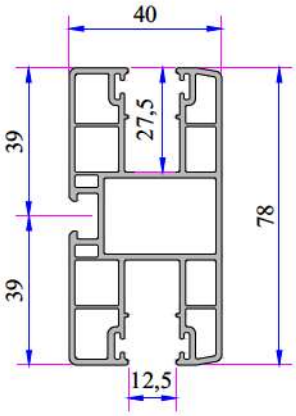

37' Side Rail Blade
097.5603

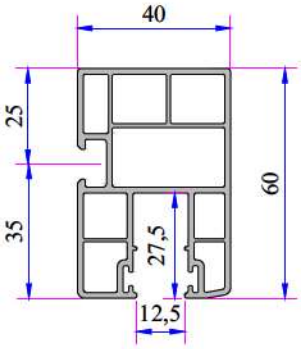

37' Middle Rail Blade
097.5602

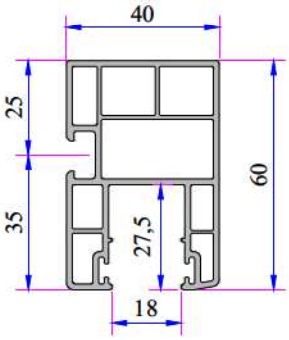

55' Side Rail Blade
097.5613

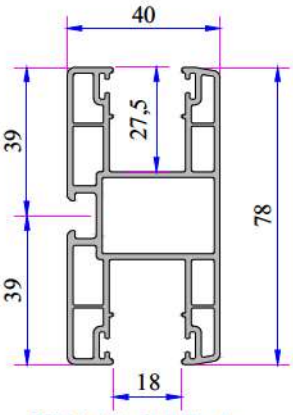

55' Middle Rail Blade
097.5614

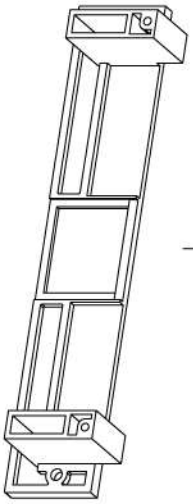

190x225 mm Insulated Roller
Shutter Side Extension Cover
34019-11020

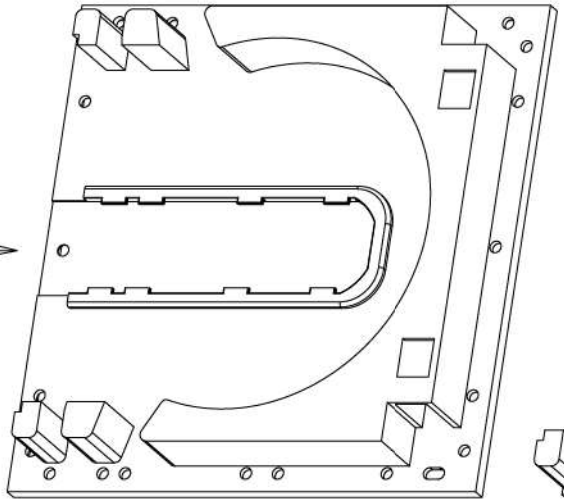

190x190 mm Shutter Side Cover
34019-11210

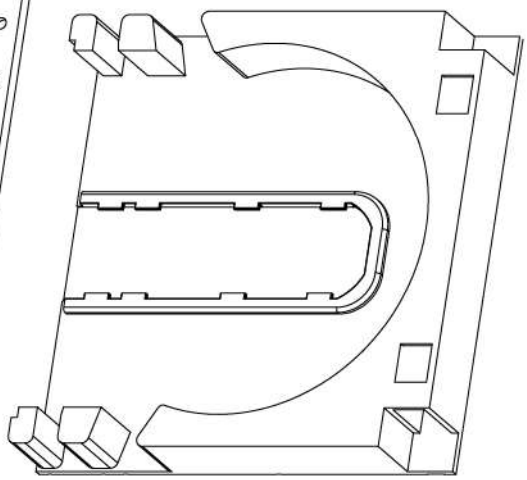

190x190 mm Shutter Middle Cover
34019-11240

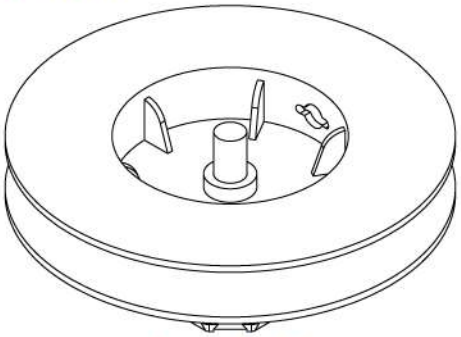

Shutter Big Roller
34019-11280

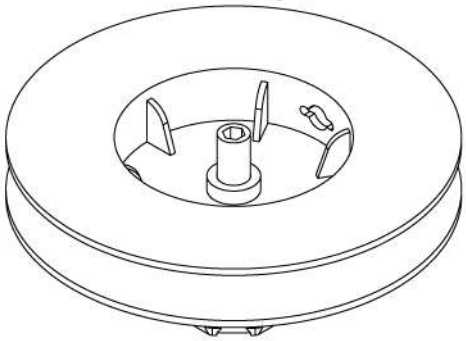

Big Roller (Controlled by Unique Control Point)
34019-11420

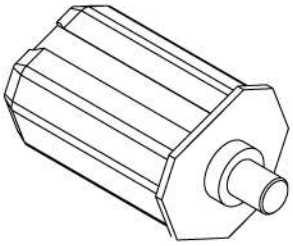

Shutter Small Roller
34019-11290

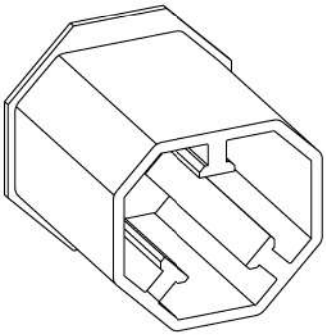

Shutter 40x60 Muff
34019-11300

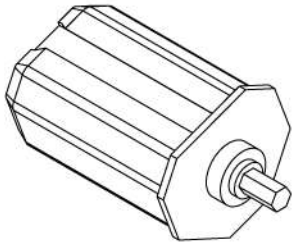

Small Roller (Controlled By Unique Control Point)
34019-11410

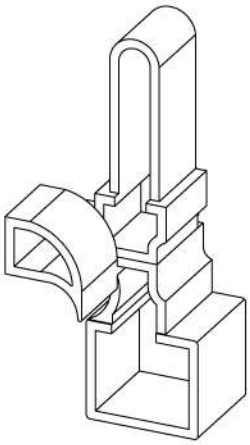

Shutter Side Rail Sled
34019-11110

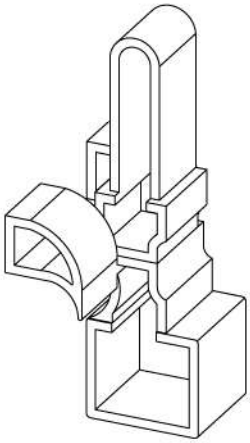

Shutter Middle Rail Sled
34019-11310

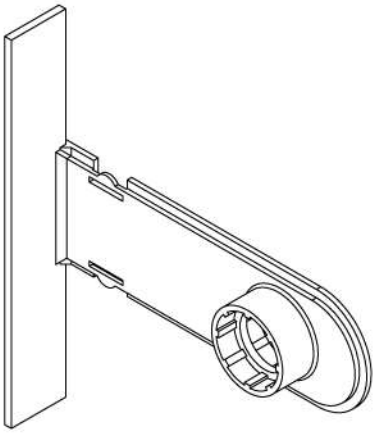

Shutter Side and Middle Roller Setting
34019-11250

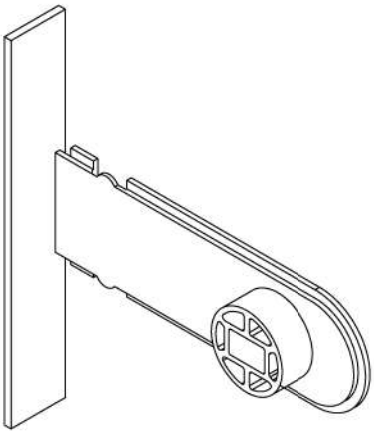

Shutter Side and Middle Roller Setting (for Motorized Shutters)
34019-11260

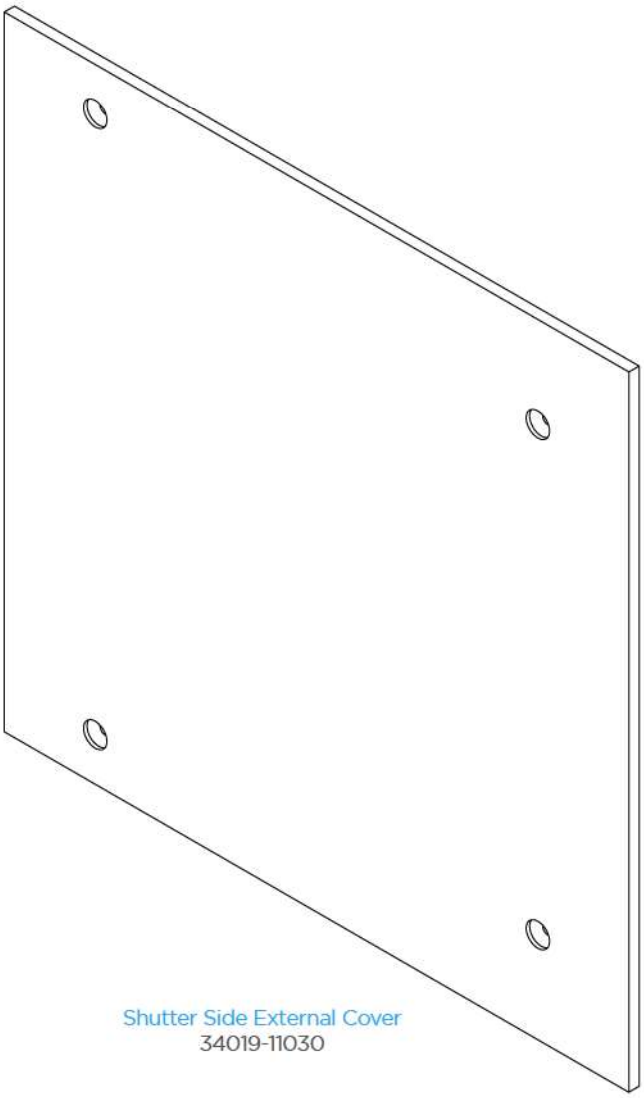

Shutter Side External Cover
34019-11030

1- 225' Shutter Box Profile
2- 190' Shutter Box Profile
3- 225' Shutter Bottom Box Profile
4- 37 - 55 Shutter Side Rail Profile
5- Alm. Bumber Bead
6- Shutter Insulation Material

190X225mm Shutter Box Profile	
225x225mm Shutter Superior Box Profile	1 Piece
190x190mm Shutter External and Inner Profile	2 Pieces
225x225mm Shutter Bottom Box Profile	1 Piece

1- For 2400mm height, 37mm total 66 pieces lamel + alm. Screw will be used. (H/37mm + 1 Piece)
2- Total quantitiy of lamels is 27 in 1m 27. (1000/37mm)

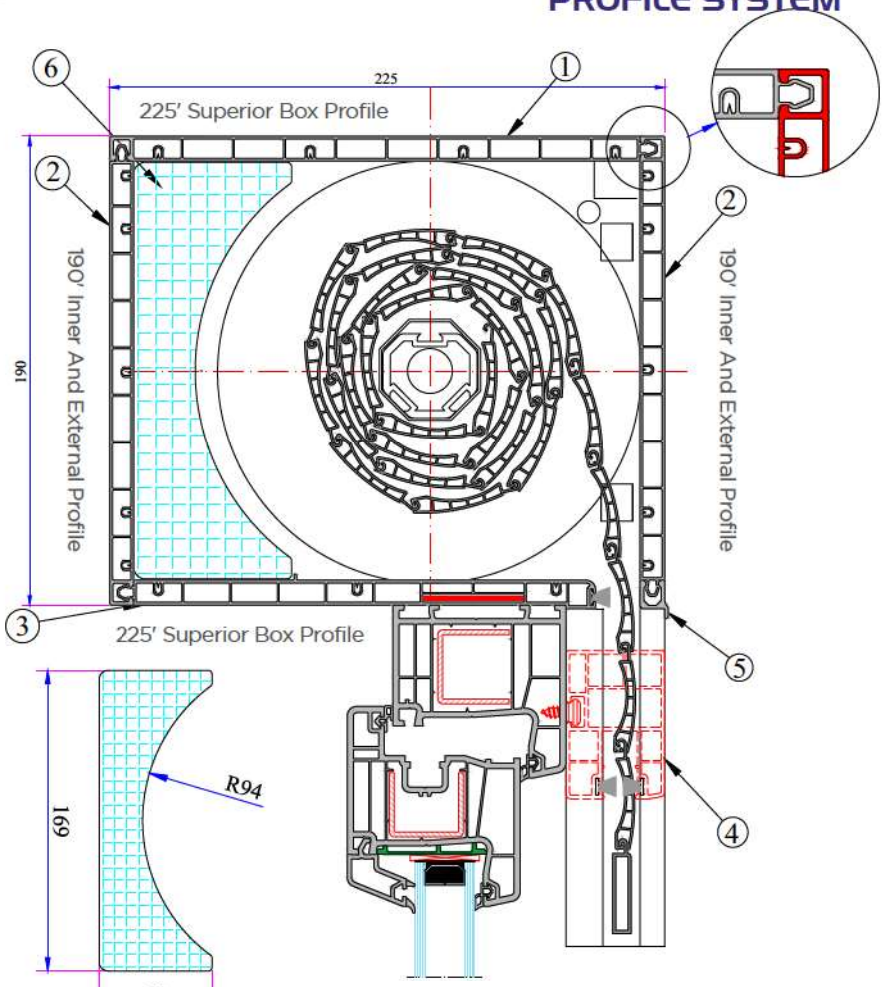

Insulation Material In Box

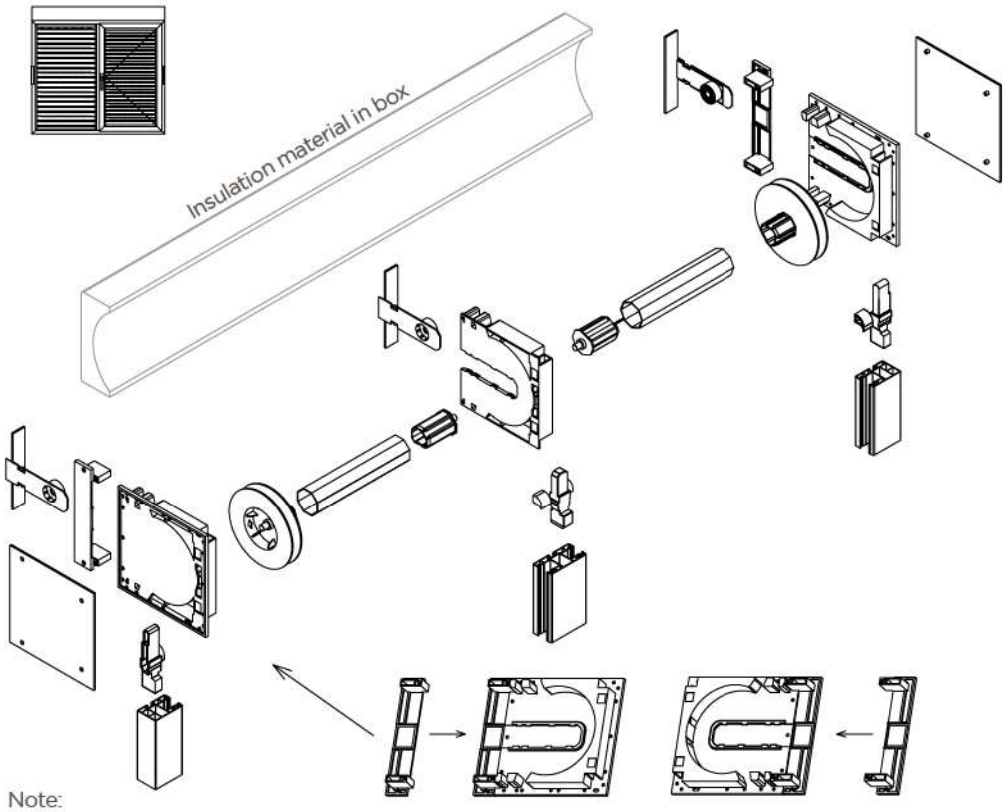

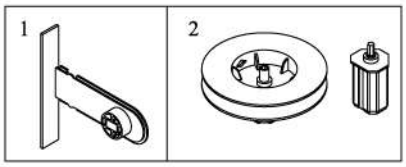

The normal 190x190mm shutter is becoming a 190x225mm shutter box cover insulated with an additional extension cover on the inner side cover.

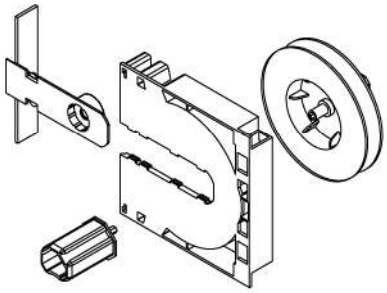

Opsitional Pieces For Single Head Control

Note:
1- In case of motorized roller shutter use , only the inner side of the roller bearing should be selected as rectangular. The picture is upwards section.
2- The single-point controlled (which does not matter whether it is corded or motorized) roller shutters including 2-3-4-pieces will have the option of transferring the small and large roller at each crossing point. The small and large rollers pass each other with hexagonal heads.

225x225mm SHUTTER BOXES

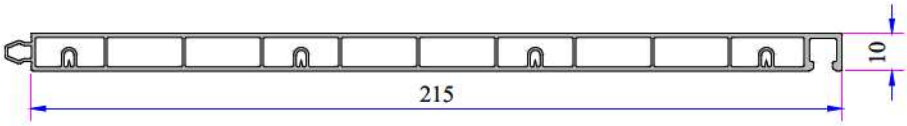

225x225' Insulated Superior Box Profile
097.5611

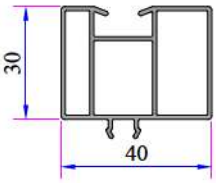

Shutter Side Rail
Lifting Profile
21108-01000

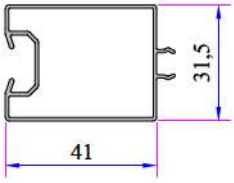

Shutter Side Rail
Lifting Profile
AD16-050

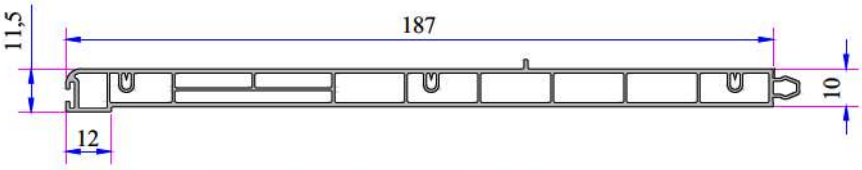

225x225' Insulated Bottom Profile
097.5612

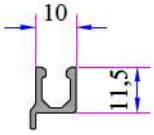

Alm. Bumber Bead
16036.601.5.1.1.9016

37' Blade Alm. For Weight
16012.601.5.1.1.9016

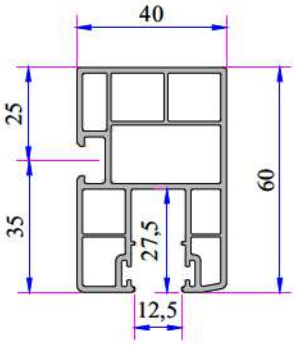

37' Side Blade
097.5602

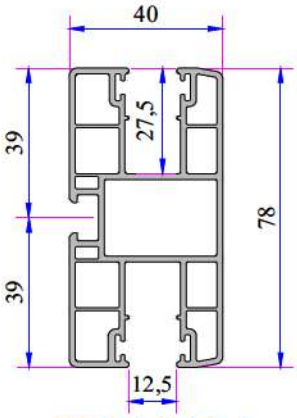

37' Middle Rail Blade
097.5603

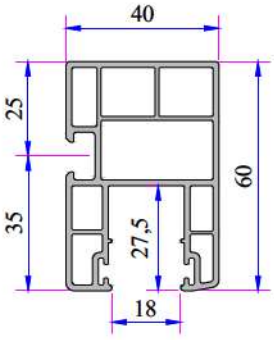

55' Side Rail Blade
097.5613

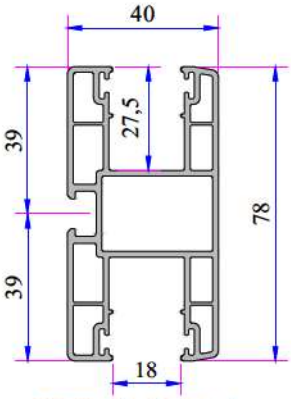

55' Middle Rail Blade
097.5614

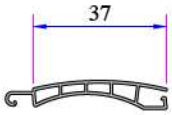

37' Shutter Blade
P.PNJ 1.37.IH.10

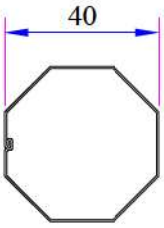

Shutter Rewinding Drum
Profile Galvanized
34019-41040

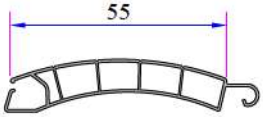

55' Shutter Blade
P.PNJ 1.55.10

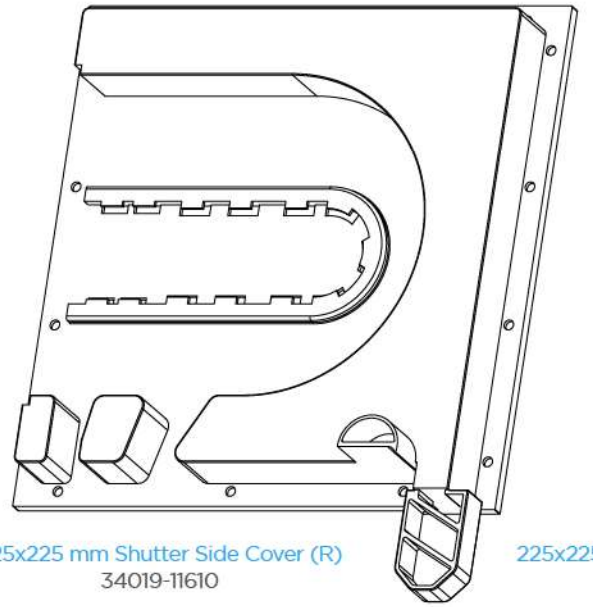

225x225 mm Shutter Side Cover (R)
34019-11610

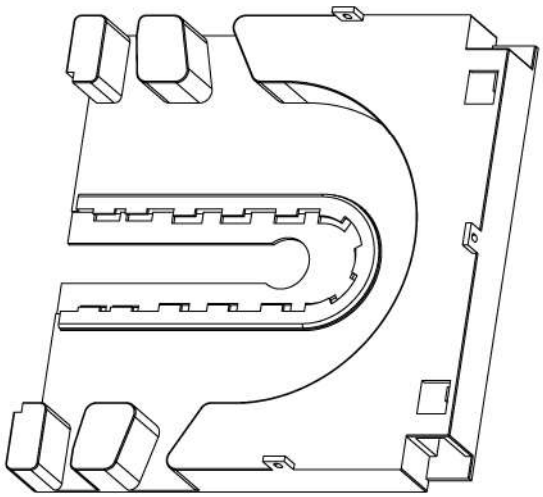

225x225 mm Shutter Middle Cover
34019-11710

225x225 mm Shutter Side Cover (L)
34019-11620

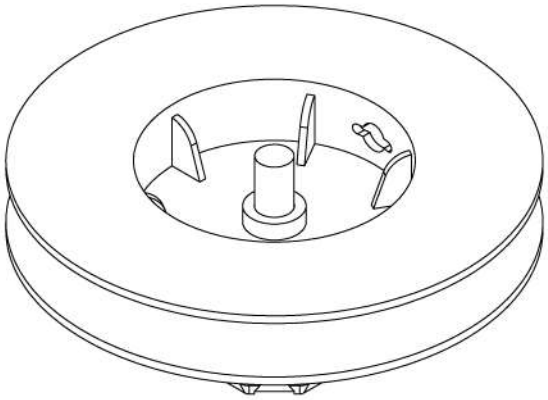

Shutter Big Roller
34019-11280

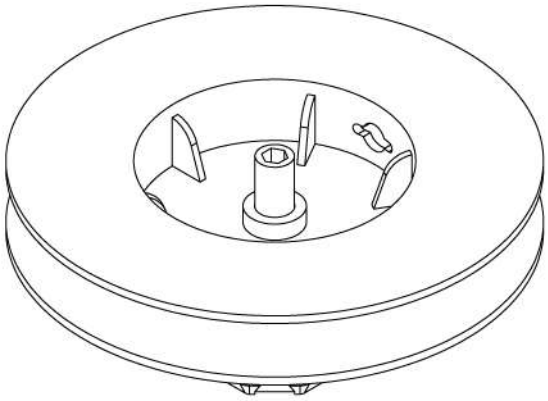

Big Roller (It Is Controlled By Unique Point)
34019-11420

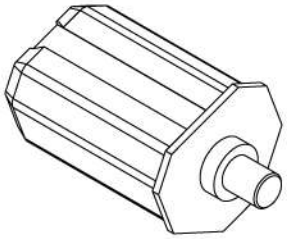

Shutter Small Roller
34019-11290

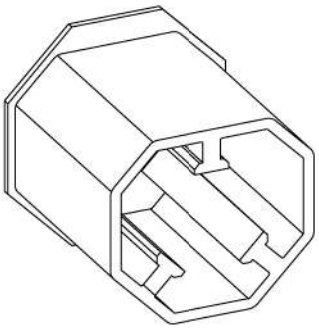

Shutter 40x60 Muff
34019-11300

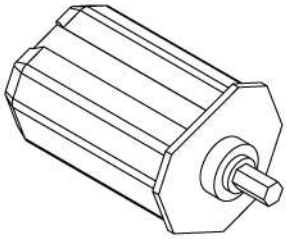

Small Roller (It is Controlled By Unique Point)
34019-11410

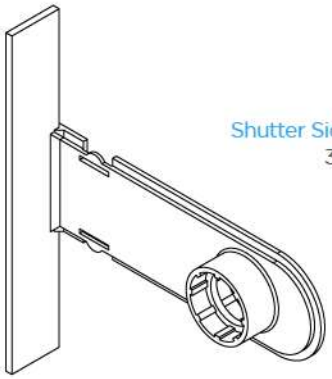

Shutter Side And Middle Roller
34019-11250

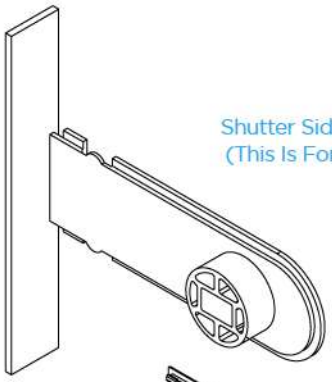

Shutter Side And Middle Roller Sitting
(This Is For Motorized Roller Shutter)
34019-11260

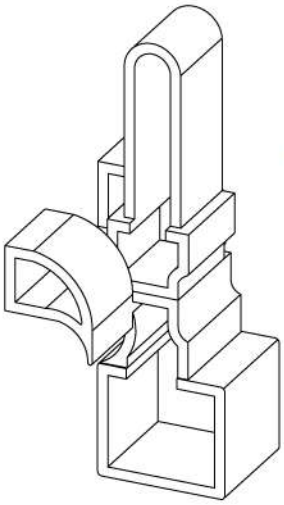

Shutter Middle Rail Sled
34019-11310

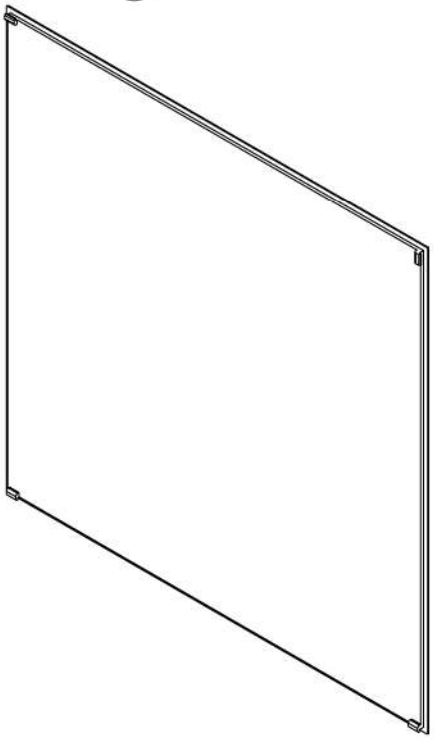

Shutter External Side Cover
34019-11510

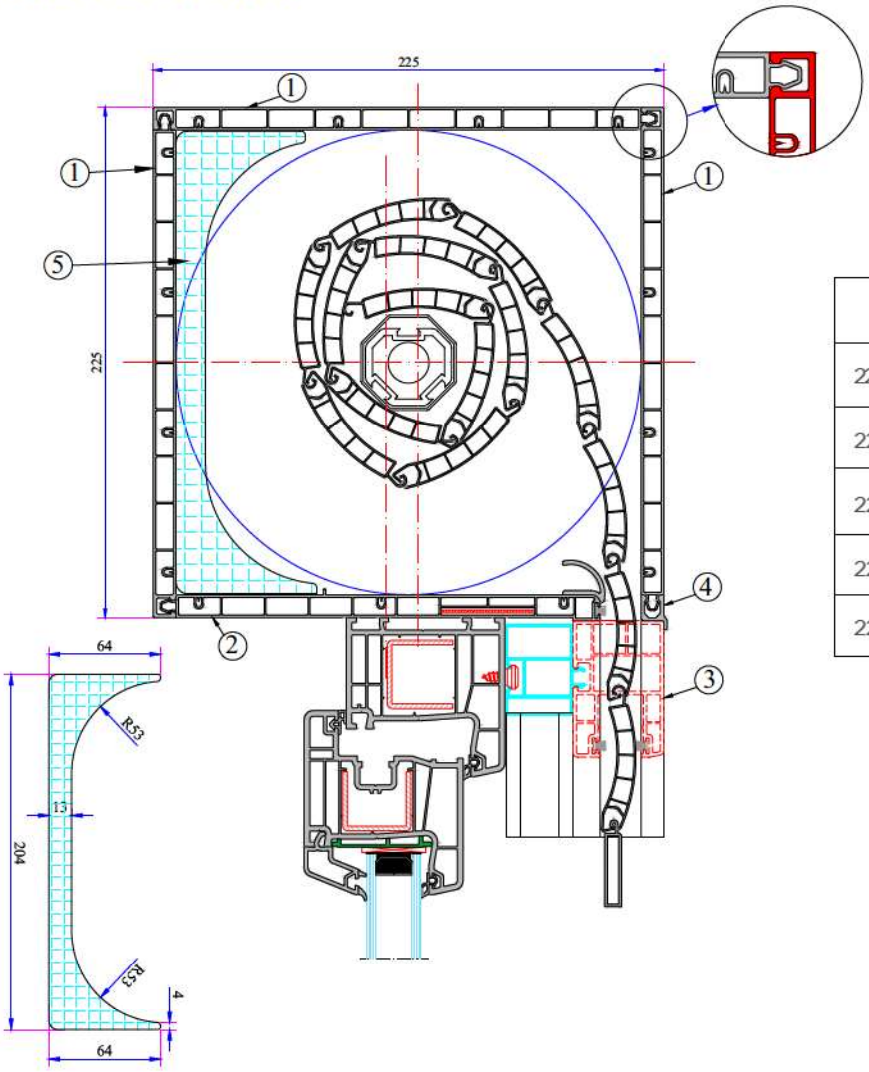

Insulation Material For Boxes

225x225mm Shutter Box Set	
225x225mm Shutter Inner And External Box Profile	3 Pieces
225x225mm Shutter Lower Side Box Profile	1 Piece
225x225mm Shutter Side Rail Profile	2 Pieces
225x225mm Alm. Bumber Bead	1 Piece
225x225mm Insulation Materials For Boxes	1 Piece

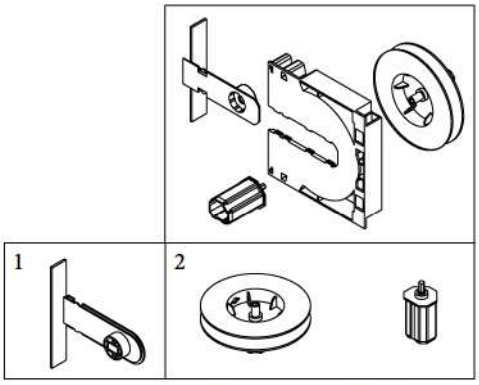

Optional Pieces For Single Hand Control

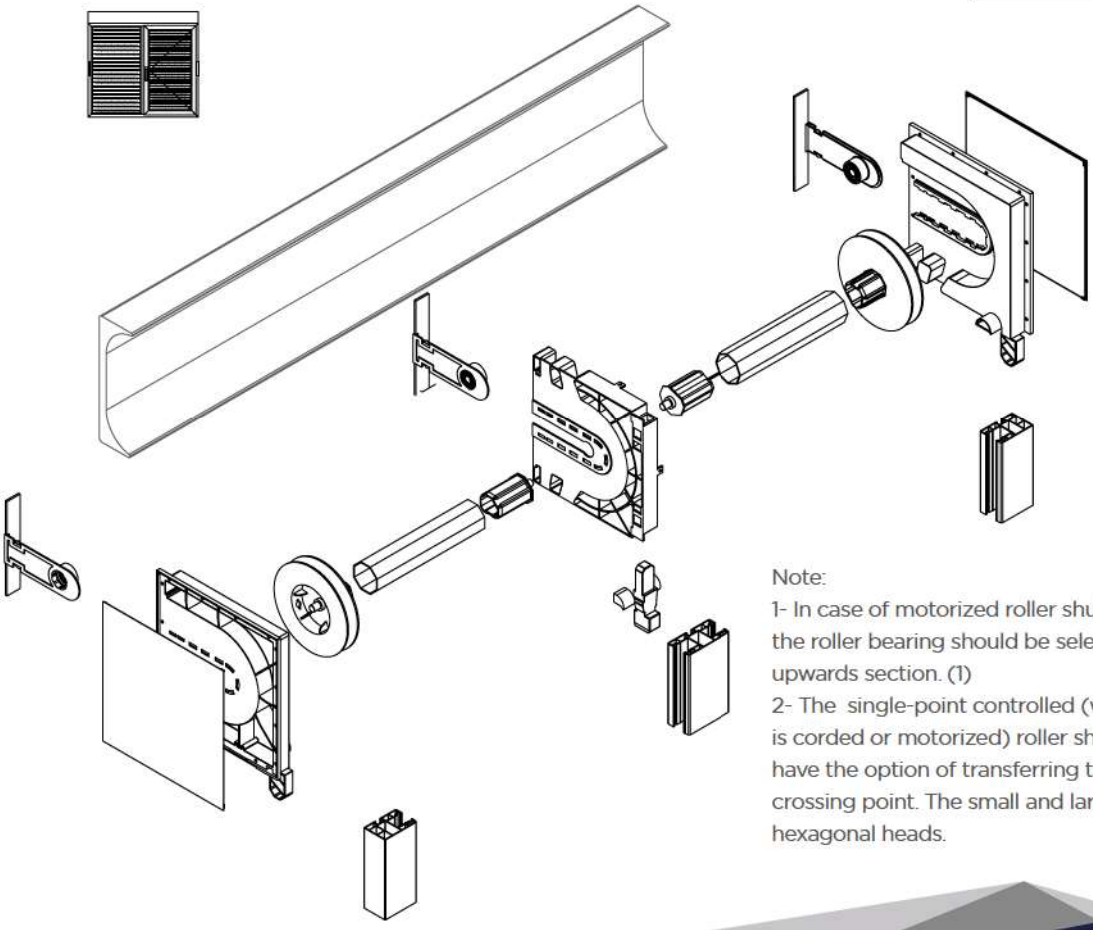

Note:

1- In case of motorized roller shutter use, only the inner side of the roller bearing should be selected as rectangular. The picture is upwards section. (1)

2- The single-point controlled (which does not matter whether it is corded or motorized) roller shutters including 2-3-4-pieces will have the option of transferring the small and large roller at each crossing point. The small and large rollers pass each other with hexagonal heads.

155x155mm SHUTTER BOXES

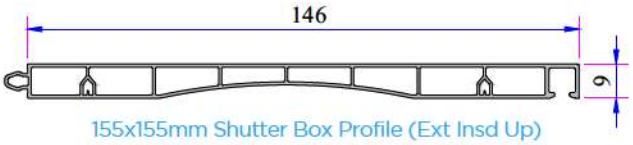

155x155mm Shutter Box Profile (Ext Insd Up)
097.5607

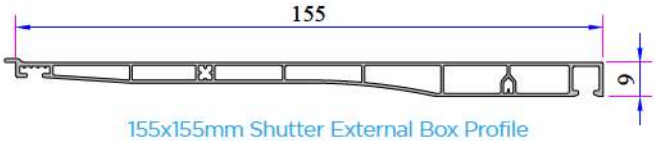

155x155mm Shutter External Box Profile
097.5606

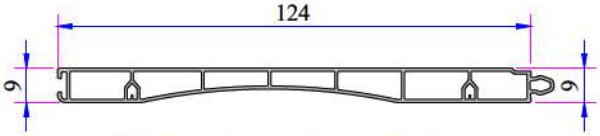

155x155mm Shutter Bottom Box Profile
097.5608

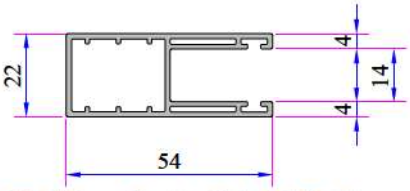

155x155mm Shutter Side Rail Profile
097.5609

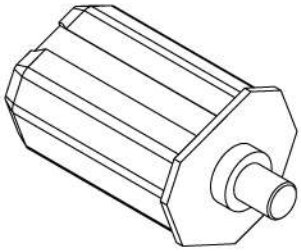

Shutter Small Roller
34019-11290

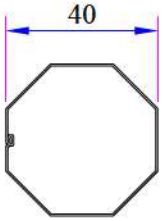

Shutter Rewinding Drum Galvanized
34019-41040

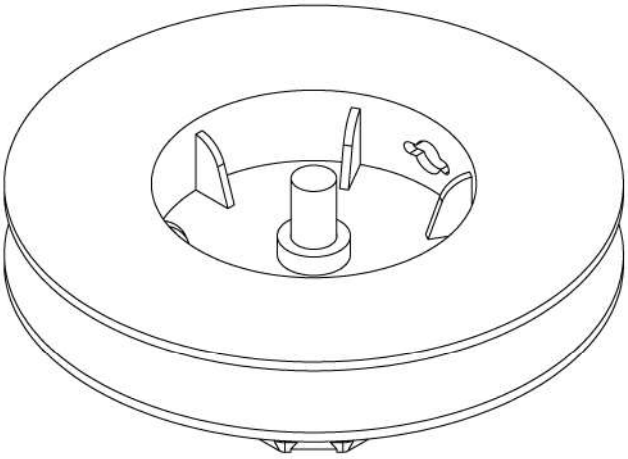

Shutter Big Roller
34019-11280

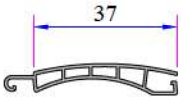

37' Shutter Blade
P.PNJ 1.37.IH.10

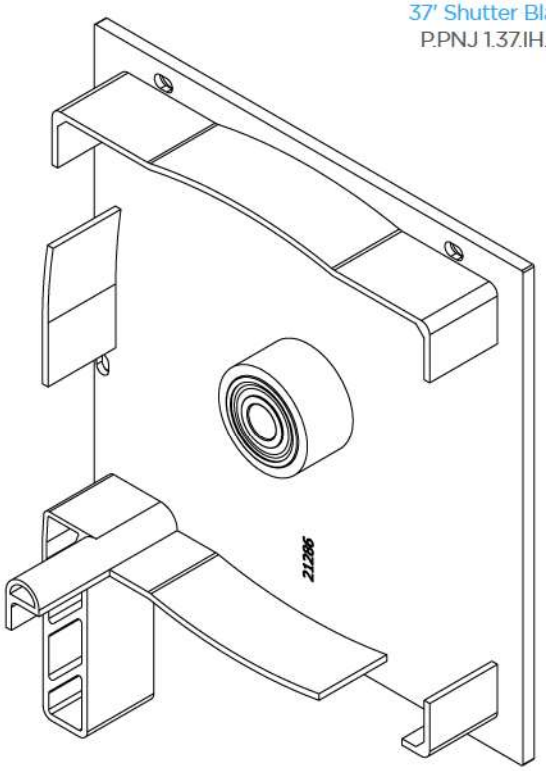

155x155 mm Corded Shutter Side Profile Left And Right Are Different)
34019-11040

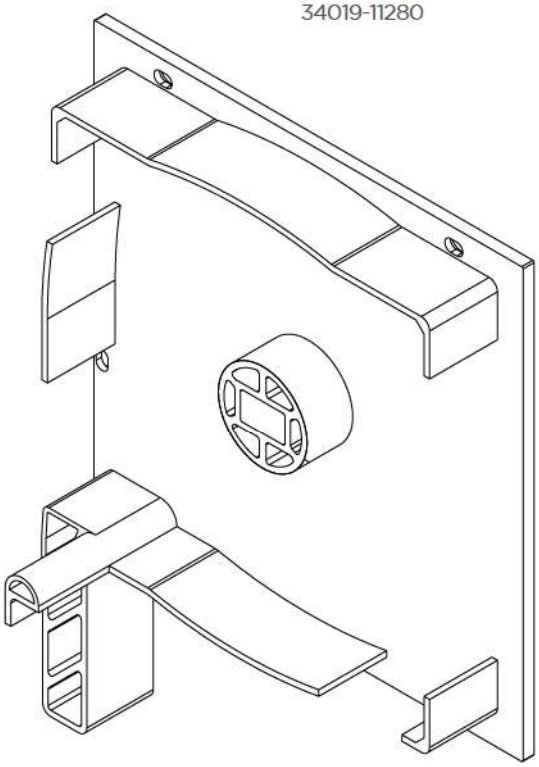

155x155 mm Motorized Shutter Side Cover (Left And Right Are Different)
34019-11050

ROLLER SHUTTER PROFILE SYSTEM

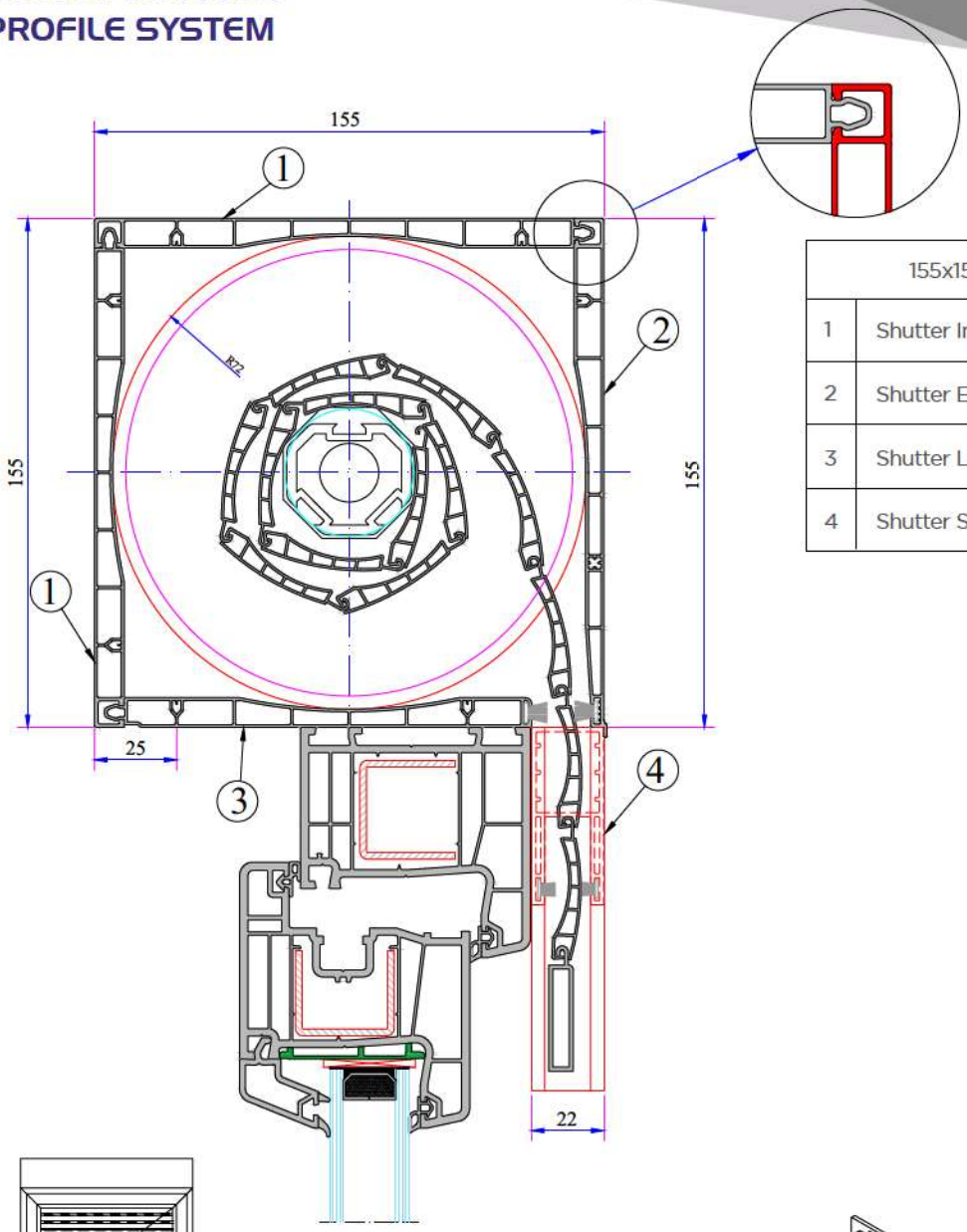

155x155mm Roller Shutter Box Systems		
1	Shutter Inner And Superior Box Profile	2 Pieces
2	Shutter External Box Profile	1 Piece
3	Shutter Lower Side Box Profile	1 Piece
4	Shutter Side Rail Profile	2 Pieces

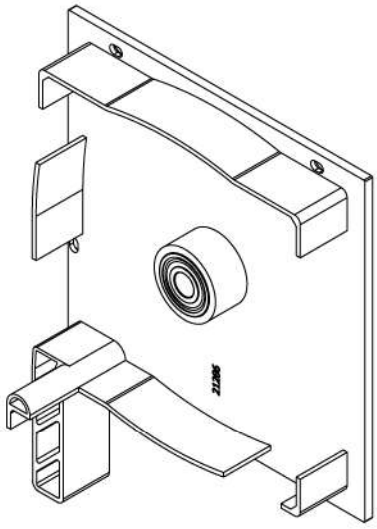

155x155 mm Corded Shutter Side Cover
(Right And Left Side Are Different)
34019-11040

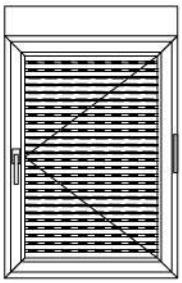

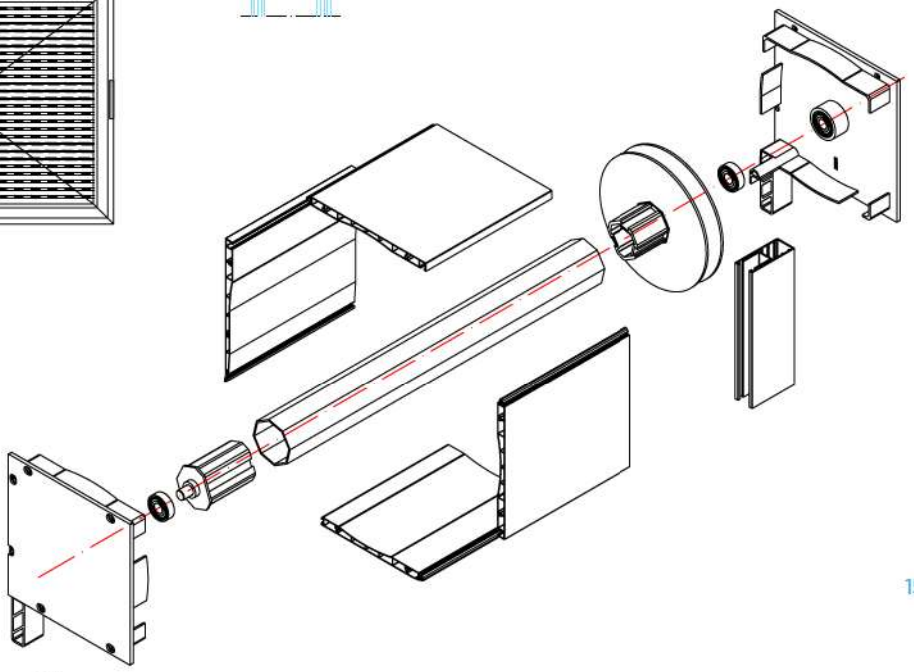

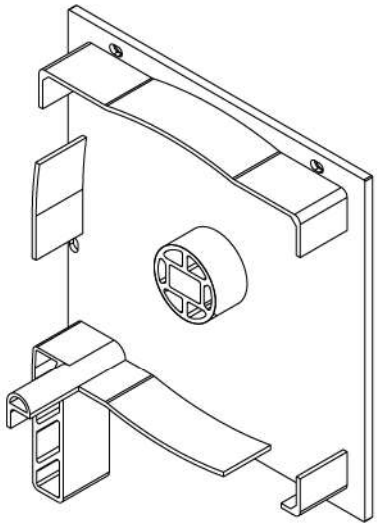

155x155 mm Motorized Shutter Side Cover
(Right And Left Sides Are The Same)
34019-11050

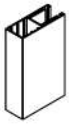

Note:
1- In the case of motorized roller shutter, only the inner part of roller bearing must be rectangular. The image is as above. (1)

SHUTTER MAIN PROFILES

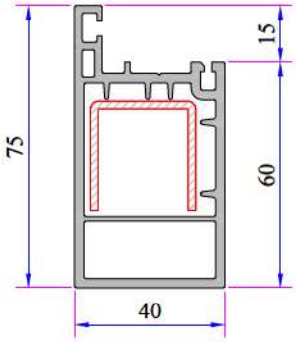

Sash Profile
098.5900

Mullion Profile
098.5901

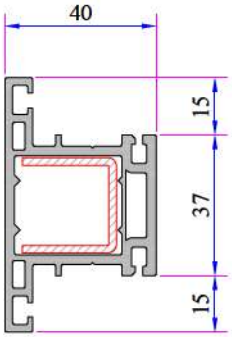

SHUTTER AUXILIARY PROFILES

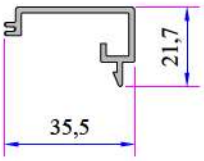

Sash Cover Profile
098.5905

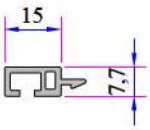

Shutter Blade Bead
098.5904

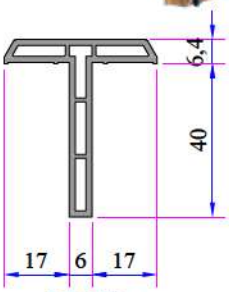

T Profile
098.5902

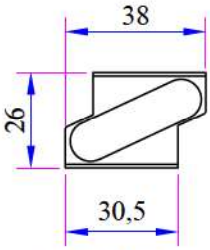

Single Sled
34020-11010

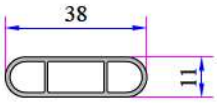

Shutter Blade
098.5903

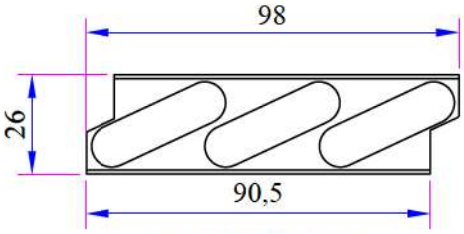

Shutter Blade Bead
34020-11020

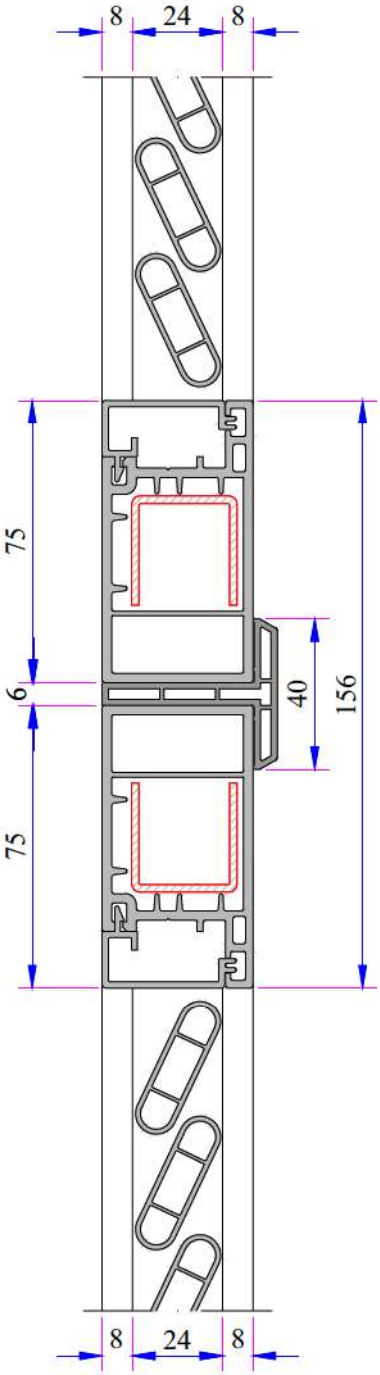

Shutter Installation

SHUTTER INSTALLATION

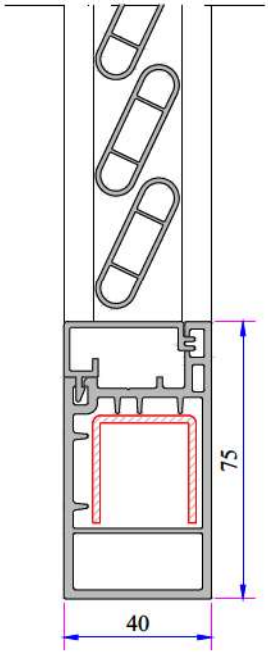

Shutter Blade Sash Installation

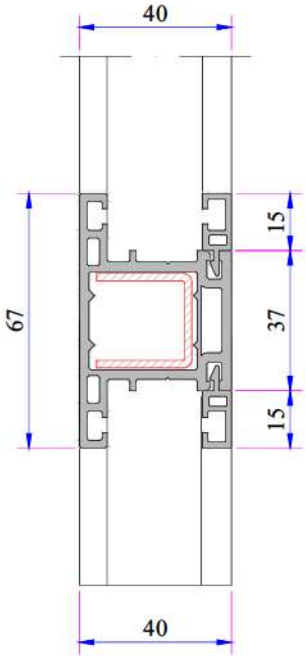

Shutter Mullion Installation

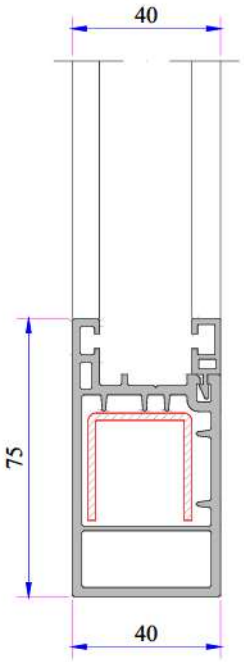

Shutter Blade Bead Installation

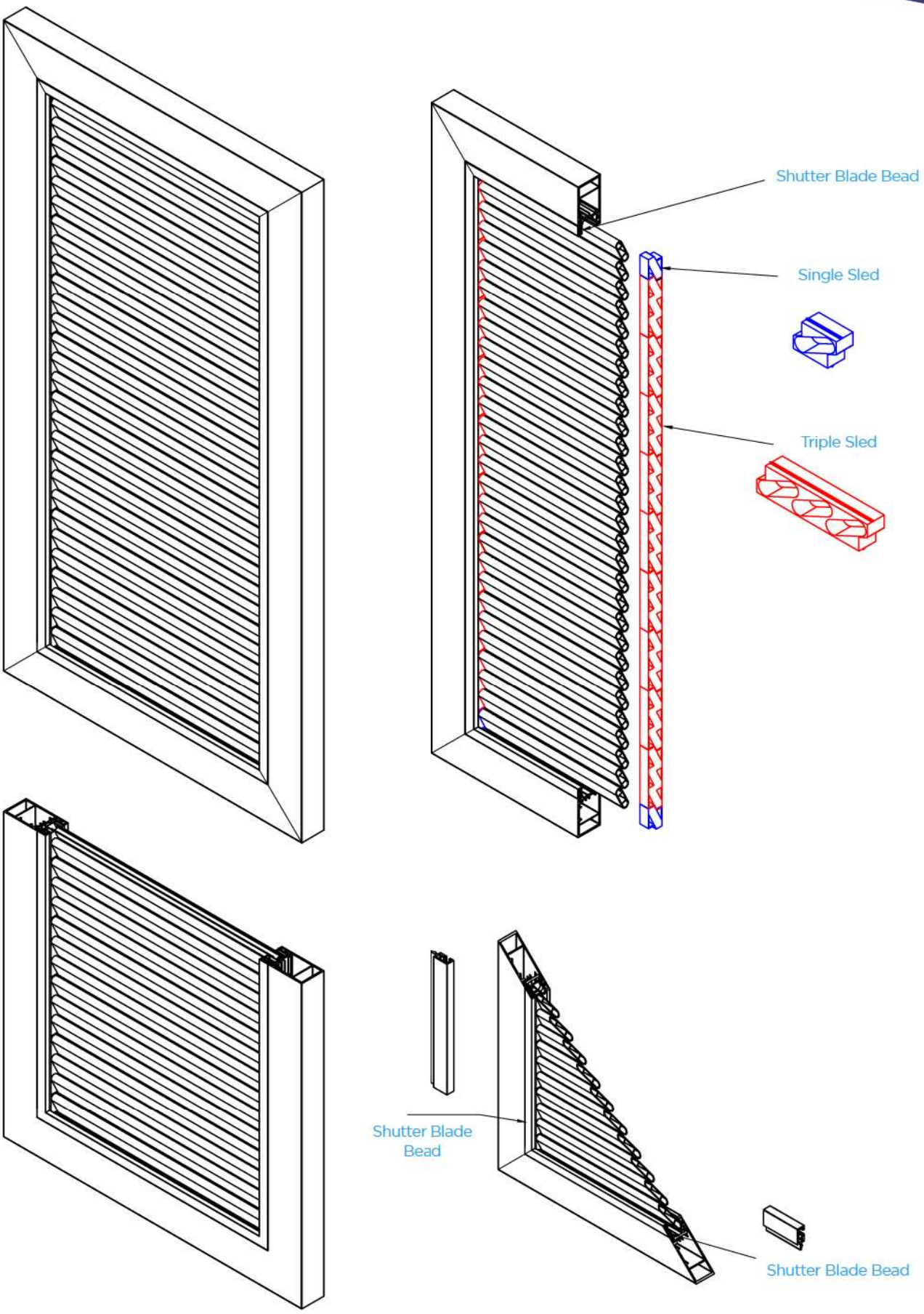
Shutter Blade Bead
Single Sled
Triple Sled
Shutter Blade
Bead
Shutter Blade Bead

80' Serie Glazing Beads (800-860) & for 873 series Frame and Mullion						
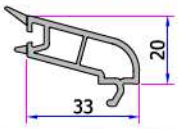 Double Glazing Bead (24mm) 800.4200	Series	80 Series	70 Series	60 Series	232 Sliding Series	222 Sliding Series
	Glass Thichness	24 mm	15 mm	6-8 mm		
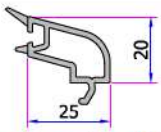 Double Glazing Bead (32mm) 800.4500	Series	80 Series	70 Series	60 Series	232 Sliding Series	222 Sliding Series
	Glass Thichness	32 mm	24 mm	17 mm	6 mm	
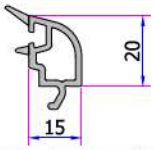 Double Glazing Bead (42mm) 800.4600	Series	80 Series	70 Series	60 Series	232 Sliding Series	222 Sliding Series
	Glass Thichness	42 mm	34 mm	26 mm	16 mm	8 mm

70' Serie Glazing Beads (750-752) & for 760 series Frame and Mullion						
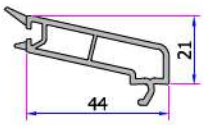 Single Glazing Bead (4-6mm) 750.4000	Series	80 Series	70 Series	60 Series	232 Sliding Series	222 Sliding Series
	Glass Thichness	14 mm	4 mm			
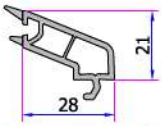 Double Glazing Bead (20mm) 750.4100	Series	80 Series	70 Series	60 Series	232 Sliding Series	222 Sliding Series
	Glass Thichness	30 mm	20 mm	12 mm	4 mm	
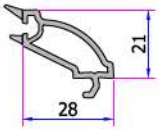 Dec. Double Glazing Bead (20mm) 750.4102	Series	80 Series	70 Series	60 Series	232 Sliding Series	222 Sliding Series
	Glass Thichness	30 mm	20 mm	12 mm	4 mm	
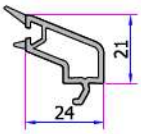 Double Glazing Bead (24mm) 750.4200	Series	80 Series	70 Series	60 Series	232 Sliding Series	222 Sliding Series
	Glass Thichness	32-34 mm	24 mm	17 mm	8 mm	
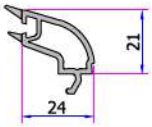 Dec. Double Glazing Bead (24mm) 750.4204	Series	80 Series	70 Series	60 Series	232 Sliding Series	222 Sliding Series
	Glass Thichness	32-34 mm	24 mm	17 mm	8 mm	
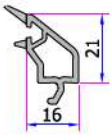 Triple Glazing Bead (32mm) 750.4500	Series	80 Series	70 Series	60 Series	232 Sliding Series	222 Sliding Series
	Glass Thichness	42 mm	32 mm	24 mm	15 mm	8 mm

GLAZING BEAD COMBINATION TABLE

Triple Sealed Series Glazing Beads (873 - 777)						
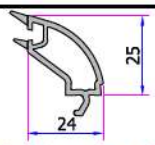 Double Glazing Bead (24mm) 777.4204	Series	873 Series	777 Series	60 Series	232 Sliding Series	222 Sliding Series
	Glass Thichness	24 mm	24 mm			
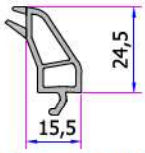 Triple Glazing Bead (32mm) 433.4200	Series	873 Series	777 Series	60 Series	232 Sliding Series	222 Sliding Series
	Glass Thichness	32 mm	32 mm			
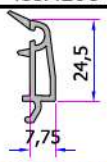 Triple Glazing Bead (40mm) 433.4500	Series	873 Series	777 Series	60 Series	232 Sliding Series	222 Sliding Series
	Glass Thichness	40 mm	40 mm			

60' Serie Glazing Beads (760 - 632 - 624 - 101)						
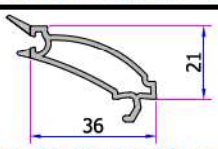 Single Glazing Bead (4mm) 101.4002	Series	80 Series	70 Series	60 Series	232 Sliding Series	222 Sliding Series
	Glass Thichness	22 mm	12 mm	4 mm		
 Dec. Double Glazing Bead (20mm) 101.4100	Series	80 Series	70 Series	60 Series	232 Sliding Series	222 Sliding Series
	Glass Thichness	38 mm	28 mm	20 mm	12 mm	4 mm
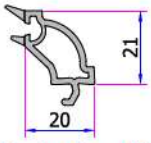 Double Glazing Bead (20mm) 101.4102	Series	80 Series	70 Series	60 Series	232 Sliding Series	222 Sliding Series
	Glass Thichness	38 mm	28 mm	20 mm	12 mm	4-5 mm
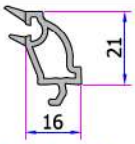 Dec. Double Glazing Bead (24mm) 101.4202	Series	80 Series	70 Series	60 Series	232 Sliding Series	222 Sliding Series
	Glass Thichness	42 mm	32 mm	24 mm	15 mm	8 mm
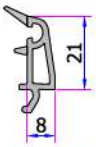 Triple Glazing Bead (32mm) 101.4500	Series	80 Series	70 Series	60 Series	232 Sliding Series	222 Sliding Series
	Glass Thichness	50 mm	40 mm	32 mm	24 mm	17 mm

60' Serie Glazing Beads (760-632-624-101)						
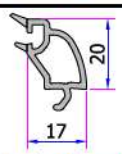 Double Glazing Bead (24mm) 900.4206	Series	80 Series	70 Series	60 Series	232 Sliding Series	222 Sliding Series
	Glass Thichness	40 mm	32 mm	24 mm	15 mm	6-8 mm
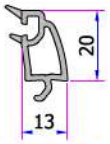 Double Glazing Bead (28mm) 900.4306	Series	80 Series	70 Series	60 Series	232 Sliding Series	222 Sliding Series
	Glass Thichness	44 mm	36 mm	28 mm	18 mm	10 mm
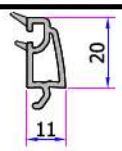 Double Glazing Bead (30mm) 900.4406	Series	80 Series	70 Series	60 Series	232 Sliding Series	222 Sliding Series
	Glass Thichness	46 mm	38 mm	30 mm	20 mm	14 mm
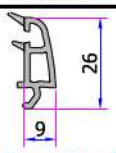 Double Glazing Bead (32mm) 900.4506	Series	80 Series	70 Series	60 Series	232 Sliding Series	222 Sliding Series
	Glass Thichness	48 mm	40 mm	32 mm	22 mm	15 mm
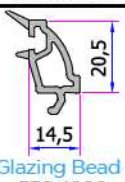 Double Glazing Bead (24mm) 532.4202	Series	80 Series	70 Series	60 Series	232 Sliding Series	222 Sliding Series
	Glass Thichness	42 mm	34 mm	26 mm	16 mm	8 mm
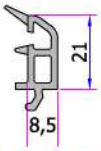 Double Glazing Bead (30mm) 532.4400	Series	80 Series	70 Series	60 Series	232 Sliding Series	222 Sliding Series
	Glass Thichness	48 mm	40 mm	32 mm	22 mm	15 mm
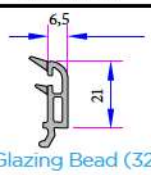 Triple Glazing Bead (32mm) 532.4500	Series	80 Series	70 Series	60 Series	232 Sliding Series	222 Sliding Series
	Glass Thichness	50-52 mm	42 mm	34 mm	24 mm	18 mm

Sliding Serie Glazing Beads (232)						
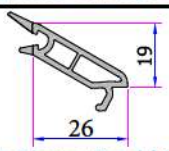 Single Glazing Bead (4mm) 332.4000	Series	80 Series	70 Series	60 Series	232 Sliding Series	222 Sliding Series
	Glass Thichness	30 mm	22 mm	14 mm	4 mm	
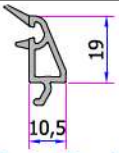 Double Glazing Bead (20mm) 332.4100	Series	80 Series	70 Series	60 Series	232 Sliding Series	222 Sliding Series
	Glass Thichness	46 mm	38 mm	30 mm	20 mm	14 mm

AUXILIARY PROFILE

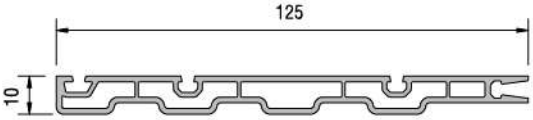

Dcr. Window Border (125x10)
P.YRD 1.DPP

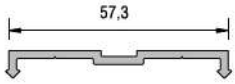

Dcr. Window Border Fixing Prf.
P.YRD 1.DPM

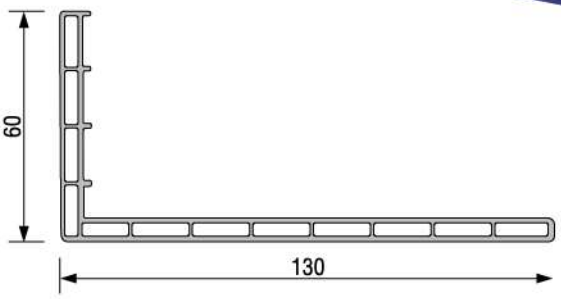

60x130 Border Profile
099.5503

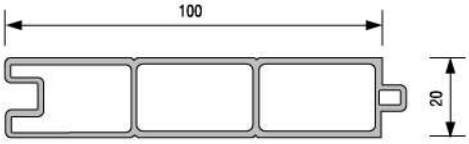

Panel Profile
099.5400

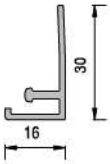

Dcr. Window Border F Profile
P.YRD 1.DPF

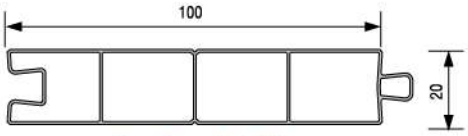

New Panel Profile
099.5401

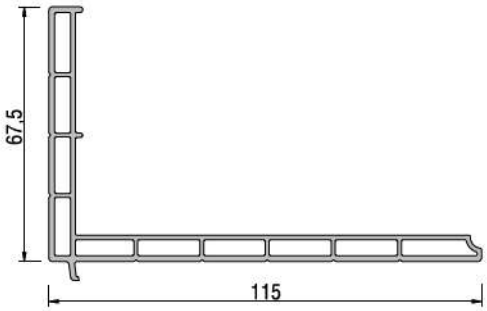

Panel Profile (67.5x115)
099.5506

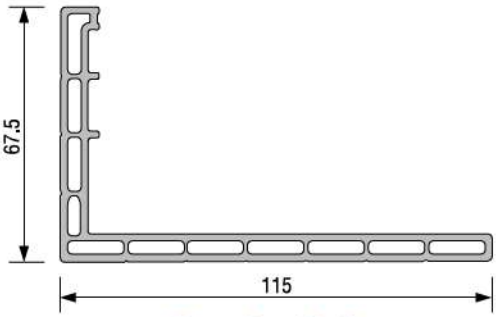

Frame Panel Profile
099.5505

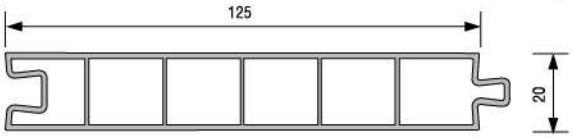

Panel Profile (125)
099.5404

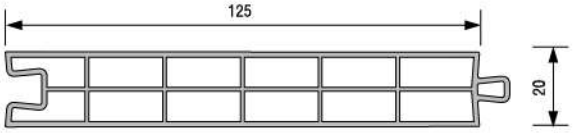

Panel Profile Two Layers (125)
099.5405

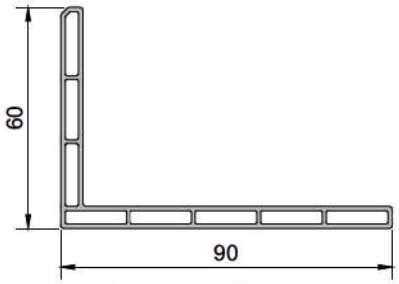

Panel Profile (60x90)
099.5502

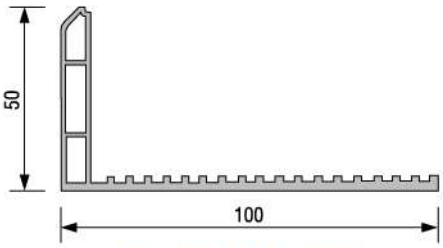

Panel Profile (50x100)
099.5501

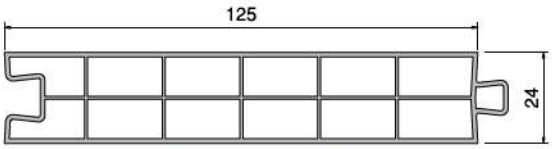

125x24 Panel Profile
099.5408

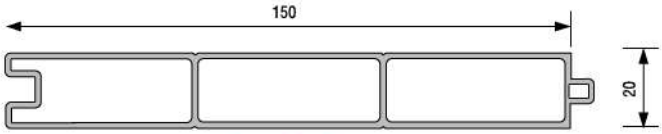

Panel Profile
099.5407

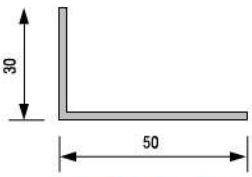

L Profile 30x50
099.5500

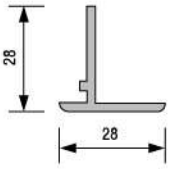

T Profile
099.5509

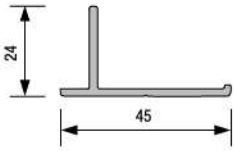

T Panel Profile
099.5508

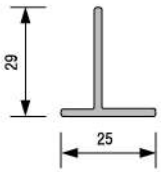

T Profile
099.5507

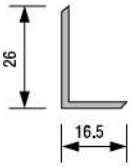

Large L Profile
099.5511

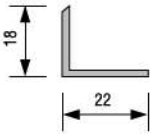

Narrow L Profile
099.5510

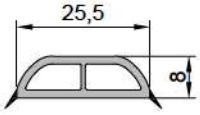

Glass Separation Bead
099.4702

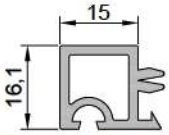

Frame Sill Profile 15mm
099.5525

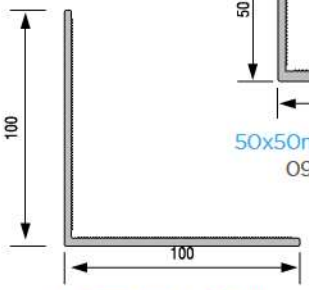

100x100mm L Profile
099.5515

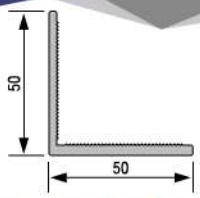

50x50mm L Profile
099.5516

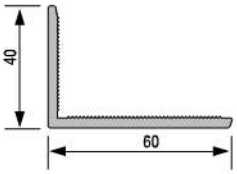

40x60mm L Profile
099.5517

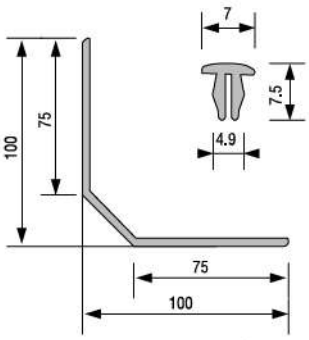

75x25x75mm L Profile
099.5518

Frame Channel
Cover Profile
099.5703

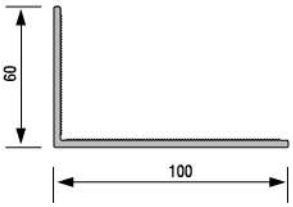

60x100mm L Profile
099.5514

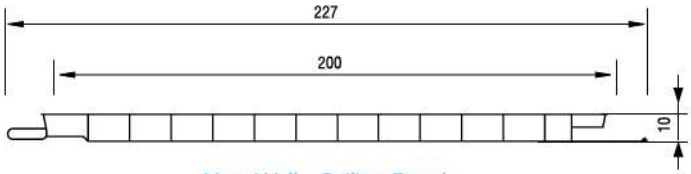

New Wall - Ceiling Panel
LMB.01.0.200

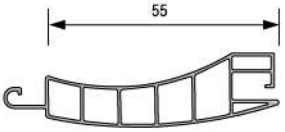

Shutter Blade 55mm
P.PNJ 1.55.10

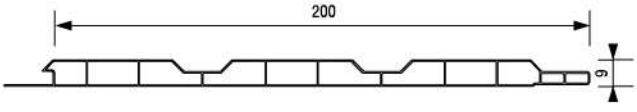

Wall / Ceiling Panel
LMB.01.2.200

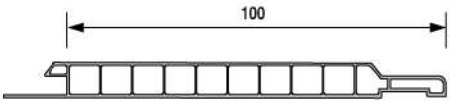

Wall Ceiling Panel 100mm
LMB.01.0.100

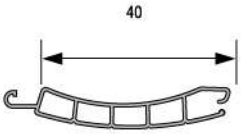

Shutter Blade 40mm
P.PNJ 1.40.10

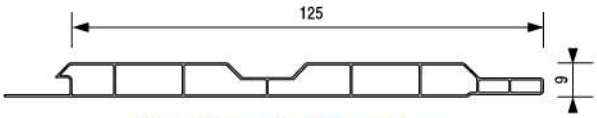

Wall / Ceiling Cladding 125mm
LMB.01.1.125

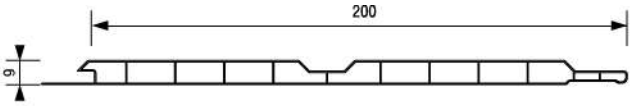

Wall / Ceiling Cladding 200mm
LMB.01 200

600mm

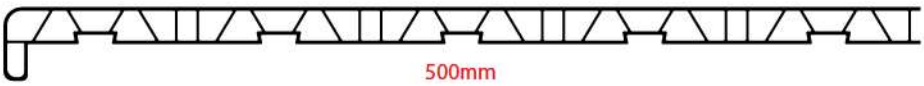

500mm

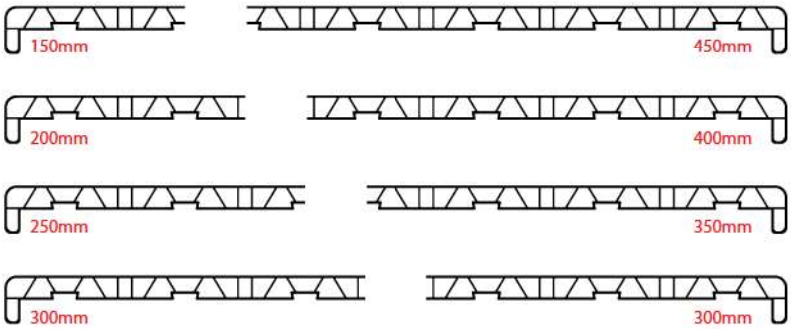

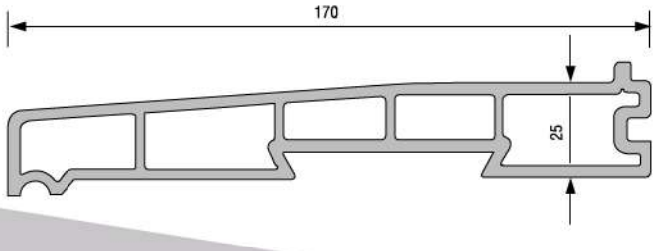

Sill Profile
099.55.13

ADO

ADO

www.ado.com.tr

FACTORY
Antalya Organize Sanayi Bölgesi 2.Kısım Mah. 21.Cadde No:3
07040 Döşemealtı / ANTALYA / TURKEY
Tel : +90 242 236 20 00 · Faks : +90 242 236 20 90 · Email : info@ado.com.tr

AUGUST / 2021